CAPRICORNIA INSTITUTE

DEPARTMENT OF ELECTRICAL ENGINEERING

SYMPOSIUM AND EXHIBITION

EXISTING TECHNOLOGY FOR RENEWABLE ENERGY RESOURCES

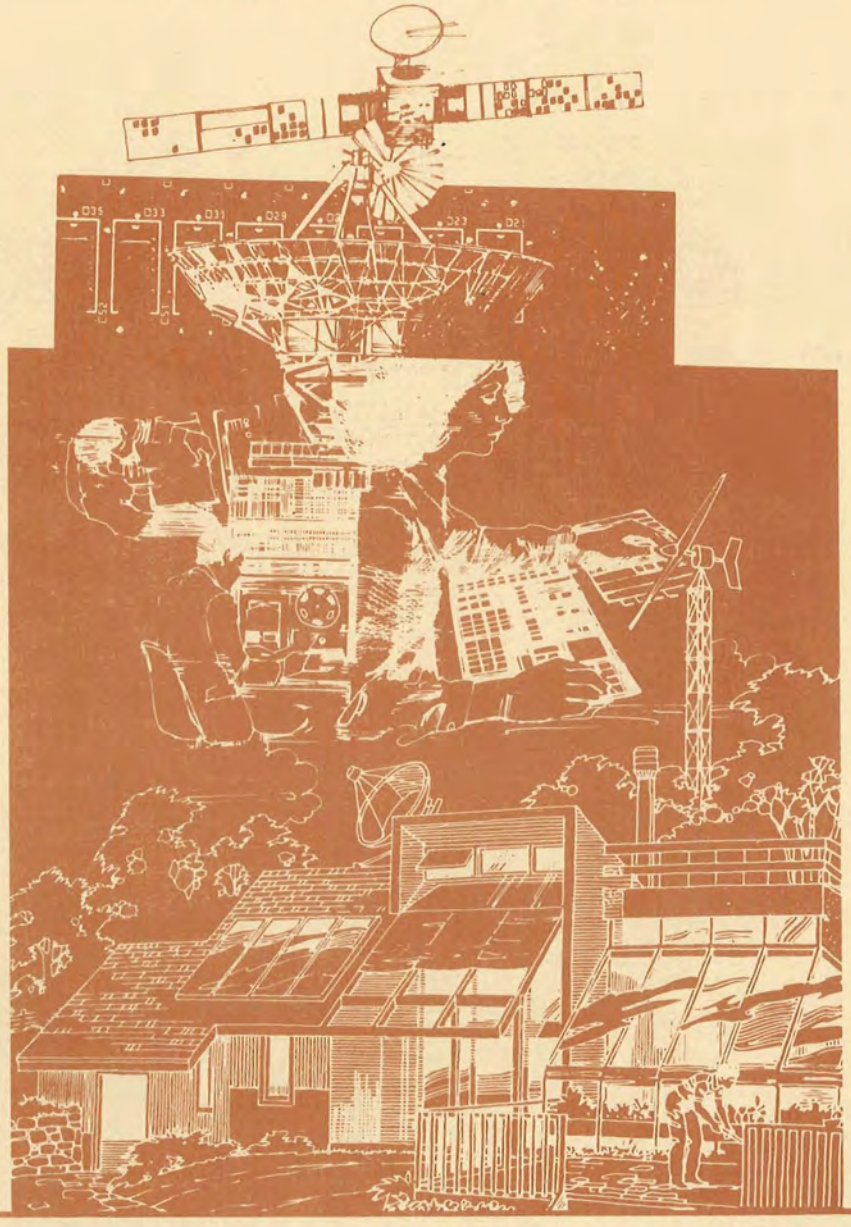

26—27 SEPTEMBER, 1985

SYMPOSIUM AND EXHIBITION

ON

EXISTING TECHNOLOGY

FOR

RENEWABLE ENERGY RESOURCES

PROCEEDINGS

Capricornia Institute
Department of Electrical Engineering

26 - 27 September 1985

SympExhib/39/2

PREFACE

New and exciting technology that has tapped the power of the sun, wind and other renewable energy resources exists today. But many of its potential users either do not understand this technology or do not have reliable and objective information on the products and systems now available.

In an effort to bridge the gap between consumers and manufacturers and provide information on products and systems, the Capricornia Institute, and The James Goldston School of Engineering, undertook the challenge in organizing this Symposium to focus on the technological advances being made in the field of renewable energy resources.

Authors will address some problems of renewable energy resources and the ways these resources can be put to immediate use with the technology now available.

Topics for discussion are broadly based and include practical technology rather than research-orientated papers. Hence the discussions are organised by starting with potentials of renewable energy resources, followed by applications of the existing technology in solar and wind energy, conversion equipment, batteries, solar architectural designs, remote area power supplies and finally, development and commercialising renewable energy resources.

The exhibition and demonstration of products, systems and services by manufacturers, distributors and retailers closely involved in the research and development of alternative energy systems to be held on Campus to coincide with the Symposium should prove to be very beneficial to the participants.

I wish to thank all the authors and exhibitors for their contributions and should like to express the wish that the participants enjoy the Symposium and will find useful interesting and pleaseant reading of the proceedings.

Finally, I wish to thank Mr Frank Schroder, Chairman of School of Engineering for his support and Mrs Mary Corley and Mrs Jacinta Cumming for their secretarial contribution.

Wardina Oghanna

Dr Wardina Oghanna
Symposium Organiser & Coordinator

TECHNICAL PROGRAM

Thursday 26 September 1985

Registration

Welcome: Dr Wardina Oghanna - Symposium Co-Ordinator

Opening Address: Mr G Turner, Deputy Chairman, Council of Capricornia Institute

Keynote Address: Dr. K. Foley, Chairman, Australian Industrial Research and Development Incentives Board.
Government Assistant to Research and Development of Manufactured Systems

Session 1: Potential of Renewable Energy Resources

Chairman: Dr N Teede, Section Head, Energy Technology Telecom, Australia, Melbourne.

Solar Radiation Data for the User/Designer
Mr. J. Bugler, Consultant, Toowoomba

Solar Tracking and its Uses
Mr. P. Boyd, Marketing Manager and Mr. D. Little
Development Manager, Solar Tracking Systems Aust. Ltd.

Wind Energy Potential for South East Queensland
Mr T D Berrill, Mr. P. Fries, Renewable Energy Services

Session 2: Solar Heating

Chairman: Mr. J. Bugler, Consultant, Toowoomba

The Solahart "Black Chrome Miracle" Solar Hot Water System,
Dr. J. Clark, Proprietor, Solahart, Rockhampton

Solar Water Heating - State of the Art
Mr. D. King, Distributor Manager, Solar Edwards, Rockhampton

Solar Pool Heating
Mr. D. Kersey, Commercial Manager, Zane Solar Energy System, Brisbane

Session 3: Applications of the Existing Technology in Solar and Wind Energy

Chairman: Mr. M. Nash, Acting General Manager, Capricornia Electricity Board, Rockhampton

Solar Bore Pumping
Mr. S. Mueller, Managing Director, Indian Pacific Solar Electric (Aust.) Ltd., Sydney

Solar-Heated Rotary-Reciprocating Cyclic Pressure Generator, and its Applications in Water Pumping and Refrigeration
Mr. J.H.V. Stephens, Retired Engineer, Yeppoon

General Applications of Photovoltaic in Radio Repeater Stations and Marine Operations
Mr. D. McLean, Marketing Director, Bon McKnight (Trading) Pty Ltd, Brisbane

Application of Wind and Solar Technology
Mr. T. Stevenson, Designer, Survival Technology, Melbourne

Session 4: Converter Equipment - Rectifiers and Inverters

Chairman: Mr. S. Mueller, Managing Director, Indian Pacific Solar Electric (Aust) Ltd., Sydney

Some applications of DC/DC Converters
Dr. K.C. Daly, Senior Lecturer, Department of Systems and Control, University of New South Wales, Sydney

Uninterruptable Power Supply for Computers and Communication
A User's Point of View - Mr. B. Wynne, Assistant Substation Operations Engineer, Queensland Electricity Commission, Rockhampton

Rectifiers and Inverters - Theory and Practice
Mr. S. Finn, Power Electronics Engineer, Gayrad Pty Ltd, Brisbane

Inverters for Alternative/Renewable Energy Systems
Mr. T. Seale, Design Engineer, Geebung Associates Pty Ltd, Grafton

Symposium Dinner

Guest Speaker: Mr. B. Siebenhausen, Chief Executive Queensland Confederation of Industry, Brisbane

Friday 27 September 1985

Session 5: Solar Architectural Designs in Housing and Commercial Building

Chairman: Mr. D. Andrews, Chartered Architect, Rockhampton

Hybrid Solar Air Conditioning - a Case Study in Townsville
Mr. S. Sureshan, Mechanical Engineer, Commonwealth Department of Housing and Construction, North Queensland, Townsville

Raw Earth - The Natural Solar System
Mr. B. Young, Chartered Architect, Sydney

Earth Integrated Building (In Ground)
Dr K Prescott, Architect

Session 6: Power Supply for Remote Consumers

Chairman: Dr. R. Sampson, General Manager, Queensland Innovation Centre Ltd

Solar Power System Design Methods
Dr. N.F. Teede, Mr. D. Kuhn & Mr. I. Muirhead, Telecom Australia Research Laboratories, Melbourne

Remote AC Power Supply
Mr. S. Mueller, Managing Director, Indian Pacific Solar Electrical (Aust) Ltd., Sydney

Potential for Hybrid Energy Systems in the Northern Territory
Dr. S. Chandra, Manager, Mr. M. Wedd, Assistant Manager, Alternative Energy Branch, NT Dept. of Mines and Energy, Darwin

Natural Energy Power Applications for Marine Navigational Aids
Mr. A.E. Crossing, Senior Development Engineer, Department of Marine Operations, Canberra.

Visit to Engineering Laboratories:

Solar Energy
Power Electronics
containerised hybrid power supply

Session 7: Batteries and Renewable Energy Resources Applications

Chairman: Mr. A. Crewe, Technical Evaluator, Australian Industrial Research and Development Incentives Board, Brisbane

Batteries for Solar and Hybrid Systems
Dr. J. Der, Section Head, Electrochemistry, Telecom Research Laboratories, Melbourne

Battery Sizing and Performance In Solar Power Systems
Mr A O Nilsson, SABNIFE, Sweden

Storage Batteries for Renewable Energy Use
Mr. I. Watson, Industrial Battery Manager, Besco Batteries, Brisbane
Mr. B. Rudge, Manager, Bob's Battery Bar and Solar Sparks, Rockhampton

Solar Powered Equipment in Queensland Railways
Mr. R. Shield, Engineer, Queensland Railways Central Division, Rockhampton

Session 8: Research, Development and Commercialising of Renewable Energy Systems

Chairman: Mr. F. Schroder, Chairman School of Engineering, Capricornia Institute

Commonwealth Government's Approach to Supporting Energy Research
Dr N F Teede, Member Technical Standing Committee, Department of Resources and Energy, Canberra

Residential Renewable Energy Technology - A Survey of Installed Systems in South East Queensland and Northern New South Wales
Mr T D Berrill, Mr. P. Fries, Managing Director, Renewable Energy Services, Brisbane

Commercialising Alternative Energy Systems
Dr. R. Sampson, General Manager, Queensland Innovation Centre Ltd., Brisbane

CRRERIS and its Availability Via CSIRO, Australis
Dr G Jackson, Manager, Information Retrieval and Marketing, CSIRO

CONTENTS

SOLAR RADIATION DATA FOR THE USER/DESIGNER

Mr J Bugler

Consultant

SOLAR RADIATION DATA FOR THE USER/DESIGNER

by

John W. Bugler*

SUMMARY

The sources and forms of solar radiation data available to the user, or designer, of solar energy systems in Australia are presented. The practicalities of retrieving the data are emphasised. Examples of useful data formats are given using Rockhampton measurements over a ten year period.

---

* John Bugler was lately on the staff of the Mechanical Engineering Department of the CIAE, Rockhampton, Qld.; he now practices as consultant in solar energy engineering, with particular interest in solar radiation.

CONTENTS

---

1. INTRODUCTION

The sun is a fusion reactor releasing enormous amounts of energy such that, to us on earth, it appears to be a sphere subtending about 32 minutes of arc and emitting radiant energy from an approximate black body at 5760K. The sun's motion relative to earth is an elliptic orbit, with a consequent variation of roughly 3.4% in the solar radiation at the edge of the earth's atmosphere about the mean value of 1353 watts per sq.m.

As the sun's radiation passes through the earth's atmosphere the energy is depleted by absorption, scattering and reflection, such that it is reduced in magnitude by at least one-quarter. The atmosphere also changes the character of the radiant energy, from purely vectorial to partly vectorial (called beam radiation) and partly diffuse radiation from the whole sky. The proportions of beam and diffuse radiation vary continuously with the state of the weather, and depend particularly on the cloud state; typically, the diffuse radiation varies from about 10% of the total when the sky is clear, to (obviously) 100% when the sun is obscured by cloud.

The beam radiation is related to the sun's altitude and azimuth angles, which are accurately predictable. Diffuse radiation is much more complex, being anisotropic even for clear skies. There is also a ground reflected diffuse component of radiation to be considered when calculating that received by an inclined plane.

The sun's radiation spectrum is a key factor in many solar energy applications; it is illustrated in Figure 1.

In what follows, it is worth bearing in mind that current measurement tolerances for solar radiation are generally of the order of 5%, with only the very best achieving about 1%. Much development work is needed on solar radiation sensors to improve on these figures.

It is appropriate at this stage to define two quantities, of considerable relevance:

Irradiance is the solar energy flux received per unit time per unit area at a surface. It is measured in watts per sq.m.

Irradiation is the solar energy flux received per unit area at a surface over a specified time period. It is the time integration of irradiance, measured in joules per sq.m.

2. SOLAR RADIATION DATA FORMATS

Solar irradiance is a continuous and continually varying quantity; it can be sensed, and its value indicated on a dial gauge or recorded on a strip chart recorder, but it cannot be digitally recorded. For archival purposes, then, it is necessary to record and store values of irradiation.

Questions which now arise are: for what regular time interval should irradiation be recorded? and, for what receiving plane should these data apply? Both questions require a compromise answer. Clearly, the shorter the time interval the greater the characterisation of the radiation climate, but the larger the number of data to be stored. We must not forget that the

systems for which we require the data have a wide range of time constants and, in reality, are responding to the ever-changing irradiance continuously. The generally accepted time period for irradiation is one hour, although the Australian Bureau of Meteorology record half-hourly data.

The receiving planes for which solar radiation is required are multitudinous, but it is accepted that irradiation on the horizontal plane provides values from which all can work, albeit with some loss of accuracy.

Hourly values of irradiation on the horizontal plane ,then, are the accepted base line data for solar energy. However, there are many users, or designers making preliminary calculations, who require only crude solar radiation data, and for these people irradiation covering one day, or even one month, sometimes proves satisfactory.

3. SOURCES OF MEASURED SOLAR RADIATION DATA

Leading on from the previous section, in which data time span and receiving plane have been discussed, there remains the question of where to take the measurements.

Users with their own equipment can take the measurements where they wish, on whatever plane the wish and over whatever time interval suits them; it will, of course, take them some considerable time to accumulate the necessary amount of data. However, it is the person who has to take whatever data is available now in the archives that we have in mind, and he has to rely primarily on the nationally established networks of recording stations.

3.1 Authorities

In Australia, the Bureau of Meteorology(1) is responsible for the network of solar radiation recording stations. The locations of these stations are given in Appendix 1, and illustrated in Figure 2. As a compromise between operating costs on the one hand, and likely areas of demand coupled with the country's climate zones on the other, these 20 stations offer a reasonable, though far from ideal, coverage.

There are probably at least as many stations again recording some form of solar radiation, but these are very rarely of use to anyone but the authority concerned. A possible exception to this is the CSIRO(2), within which various Divisions have accumulated some years of high quality data for certain locations as required for their research purposes.

Many universities and CAEs have established solar radiation recording systems, primarily for their own research purposes. These records are usually made freely available upon request, but the quality and continuity of the data is variable. Two

particular examples of such data, known by the author to be of good quality and continuity over long periods, are those published by the University of N.S.W. in Sydney, and those published by the C.I.A.E. in Rockhampton. The Sydney data are particularly valuable because of the lack of a network station in that city, although Williamtown is but 140 km to the north. The C.I.A.E. data virtually duplicate those from the network station at Rockhampton Airport, and the general user could use either set, but they are particularly valuable in the study of mesoscale variations of solar radiation.

3.2 Publications

The basic source of information in this country is "Catalogue of Solar Radiation Data, Australia"(3). This lists all that is available from the Bureau of Meteorology, either in hard copy or in computer compatible form, and is mostly concerned with the Bureau network stations. There is no charge for the catalogue, but there is a charge levied by the Bureau for any data supplied.

The CSIRO Central Library(2) not only serves as the central archive for all CSIRO information, in particular the solar radiation data recorded within the organisation, but it also serves as manager of the Australian Solar Energy Data Base. This data base incorporates much of the solar radiation data outside the national network systems and the CSIRO. It may be accessed either through a major library, or directly at the CSIRO Central Library.

Users who are members of the Association of Computer Aided Design (ACADS) have access to a particularly useful form of solar radiation data, coupled with other concurrent climatic data, specifically designed for use in heat transfer analysis of buildings, although it could be of more general use. The data bank, which relates to the 18 mainland network stations of the Bureau of Meteorology, is described in a paper by Walsh, Munro and Spencer of the CSIRO Division of Building Research(4), and some or all of the data is available on magnetic tape from ACADS(5) for an appropriate fee.

The solar radiation data for the University of NSW has been published annually since 1969 for the horizontal plane(6) and annually since 1980 for a plane inclined at 34 degrees to the horizontal facing north(7).

The solar radiation data for the CIAE at Rockhampton has been published annually over the 10 year period 1975 to 1984 for the horizontal plane(8), and over the 3 year period 1979 to 1981 for a plane inclined at 40 degrees to the horizontal facing north(9).

4. SOURCES OF DERIVED SOLAR RADIATION DATA

4.1 Models

To obtain irradiation data for a particular plane at a chosen location, in the absence of measured data, it is necessary to use a computational model. There is a wide choice of models available, ranging from those which use the essential physics of the atmosphere, to those which transform the radiation measurements routinely recorded for the horizontal plane. Characteristic of all models are the simplifying assumptions on which they are based, and the weakness of the data on which they depend. Nevertheless, bearing in mind the basic measurement accuracy of solar radiation, some of the models now being used are able to give data on a chosen plane with tolerances in the 5 to 10% range.

A review of solar radiation models is to be found in the well renowned text by Duffie and Beckman(10).

Models of particular relevance to Australia are as follows:

Spencer(11) - for the determination of clear sky beam irradiation for any time period and any surface, from data of atmospheric turbidity.

Paltridge and Proctor(12) - for the determination of monthly mean irradiation values, using meteorological data.

Bugler(13) - for the determination of hourly irradiation on any surface, using measured data on the horizontal surface.

4.2 Publications

Models for clear sky (i.e., cloudless sky) irradiation are now sufficiently validated for tables to be published for the major population centres. Spencer(14), using his own model, has produced handy and readily available booklets for cities: Melbourne, Sydney, Perth, Hobart, Canberra, Brisbane, and Adelaide (in that order), which include tables of the sun's position relative to the city's location at each hour. Bugler and Spencer(15) have co-operated to produce a similar, though more comprehensive, set of tables for Rockhampton.

It must not be forgotten that clear sky conditions are comparatively rare for most locations. Nevertheless, these clear sky tables are very useful for work needing the extreme radiation data for each place.

Comparatively crude, but conveniently widespread, data of monthly mean irradiation on a horizontal surface, and that for surfaces facing north inclined at latitude angle, have been produced by Paltridge and Proctor using their own model. These may be found either in their original paper(12) or, in more readable and more accessible form for most people, in a

book by Charters and Prior(16). Most users will find a place amongst the 43 listed locations to satisfy their requirement, but it must be appreciated that the data are subject to a tolerance of at least 10%, in spite of the long time period of the irradiation.

The professional solar system designer generally requires hourly irradiation values extending over a sufficiently long period; this period must be at least one year in order to encompass all the seasons, and is desirably many years. Bugler's model has been used widely in Australia and New Zealand to transform hourly horizontal irradiation into hourly irradiation on a selected plane using a comprehensive FORTRAN program PRERAD(17). In particular, this program has been used in a number of solar industrial heat demonstration installations, for which the data from the Williamtown and Melbourne network stations was found to be suitable. As a consequence, the CSIRO has published comprehensive tables of hourly, daily and monthly derived irradiation on various inclined planes for these two places(18)(19).

5. SOME EXAMPLES OF SOLAR RADIATION DATA FORMATS

If one has an acceptable solar radiation model, a sufficiently long period of hourly irradiation data at, or near, the desired location, and access to a digital computer, these data can be manipulated into almost any form the user or designer requires. Bugler's model, applied to ten years of data recorded at the CIAE in Rockhampton from 1975 to 1984, has been used to generate the examples of solar radiation data formats which follow. An albedo factor of 0.2 has been used in calculating the ground reflected irradiation in all these data.

5.1 Irradiation on north facing planes

Because of the symmetry of the sun's orbit relative to due north, a major interest of the solar scientist is in n-facing planes at various slopes. Table 1 has been derived, in the manner described, for slopes at 15 degree intervals, and the data graphically illustrated in Figure 3. There, it will be observed that, whilst the year-round maximum irradiation will be obtained at a slope of approximately the latitude angle (23.3 degrees for Rockhampton), slopes of more or less than this angle would be more appropriate if winter or summer energy, respectively, is to be maximised. This is shown more clearly in Figure 4, which isolates the seasonal effects on the data.

Refering back to Table 1, it is particularly interesting to compare the irradiation on fixed planes with that on a sun-tracking plane. One is often presented with startling claims of the benefits of sun-tracking; but, within the limitations of the computational technique used here, it may be seen that

sun-tracking offers just a 30% benefit over a fixed plane at latitude angle year-round at Rockhampton.

Finally, with reference to Table 1, the beam irradiation on a sun-tracking plane has also been calculated, illustrating the more limited amount of energy available to a concentrating solar collector.

5.2 The effect of azimuth angle on irradiation

Attention is now given to irradiation on planes which are of given slope and various azimuth angles. In this context, the accepted convention is that azimuth angles are positive when the plane faces east of north and negative facing westwards. In Table 2, monthly average irradiations are listed for planes inclined at the latitude angle (23.3 deg.) and with azimuth angles ranging from west to east. These data, along with those for planes inclined at 40 degrees, are graphically illustrated in Figure 5.

The first noteworthy aspect of these data is the approximate symmetry about due north. Whilst this might be anticipated, it must not be overlooked that real weather, in particular cloudscapes, are often different before and after noon. In fact, study of the shorter time irradiation data does reveal this difference. However, over the longer time periods of the Table 2 data, and mindful of the accuracy of the figures, east and west facing planes equally angled from north receive the same irradiation.

Considering the irradiation average for the whole year, there is surprisingly little decrease for even a 90 degree azimuth angle below that for the north facing plane (8 %), when the slope of the plane is 23.3 degrees. For a plane sloping at 40 degrees, this decrease of irradiation increases to 13 %, and clearly gets larger as the slope of the plane increases. The effect of azimuth angle is much more pronounced when looking specifically at a winter month (June), where the irradiation loss for a 90 degree azimuth angle is about 23 % for a slope of 23.3 degrees, and about 34 % for a slope of 40 degrees.

5.3 Irradiation on vertical planes (e.g., walls)

For the purposes of determining heat loads on buildings and comfort conditions within houses, irradiation on vertical surfaces is of particular importance. Using program PRERAD, this can be done for walls facing any direction, but walls facing the four cardinal directions are of special interest. Irradiation on these four surfaces is listed in Table 3, together with summations for north and south walls and for east and west walls respectively. Clearly evidenced by the data in Table 3, is the need to align dwellings in the Rockhampton region in the east-west direction for minimising heat gain in the summer months.

It must be emphasised in conclusion that, whilst these long term data formats have yielded some interesting and valuable pointers, actual solar energy systems respond to the continuously variable irradiance. Thus, in detail solar energy system design, there is no substitute for relevant short term irradiation data, of hourly interval or less, extending over several years. These data can be generated for some parts of Australia within a tolerance of 5 to 10%. Only rarely are suitable measured data available.

6. REFERENCES

1. Australian Bureau of Meteorology. Official address is: The Director of Meteorology, Australian Bureau of Meteorology, 150 Lonsdale Street, Melbourne, Victoria, 3000, Australia.

2. CSIRO. Official address for enquiries: The Manager, CSIRO Central Information, Library and Editorial Section, 314, Albert Street, East Melbourne, Victoria, 3002.

3. "Catalogue of Solar Radiation Data, Australia". Published by Australian Government Publishing Service, Canberra, A.C.T., 2600. (1979).

4. P.J.Walsh, M.C Munro and J.W.Spencer, "An Australian Climate Data Bank for use in the Estimation of Building Energy Use". CSIRO, Division of Building Research, Highett, Vic., 3190. (1984).

5. Mechanical Building Services Group, ACADS., 576 St. Kilda Road, Melbourne, Vic., 3004.

6. "Tables of Global Solar Radiation on Horizontal Surface for 1984 at Sydney". (Also for previous years from 1969). Published by the School of Mechanical and Industrial Engineering, University of NSW, Kensington, NSW, 2033. (1985).

7. "Tables of Global Solar Radiation on Inclined Surface (34 degrees) for 1984 at Sydney". (Also for previous years from 1980). Published by the School of Mechanical and Industrial Engineering, University of NSW, Kensington, 2033. (1985).

8. J.W.Bugler, "Solar Radiation Tables for 1984 at Rockhampton". (Also for previous years from 1975). Published by CIAE, Rockhampton, Qld., 4700. (1985).

9. J.W.Bugler, "Tables of Solar Radiation on Inclined Plane at 40 degrees to the Horizontal Facing North at Rockhampton, 1979-1981". Published by CIAE, Rockhampton, Qld., 4700. (1982).

10. J.A.Duffie and W.A.Beckman, "Solar Engineering of Thermal Processes". Wiley (1980).

11. J.W.Spencer, "Computer Estimation of Direct Solar Radiation on Clear Days". Solar Energy, 13, 437-8, 1972.

12. G.W.Paltridge and D.Proctor, "Monthly Mean Solar Radiation Statistics for Australia". Solar Energy, 18, 1-19, 1976.

13. J.W.Bugler, "The Determination of Hourly Insolation on an Inclined Plane using a Diffuse Irradiance Model based on Hourly Measured Global Horizontal Insolation". Solar Energy, 19, 477-491, 1977.

14. J.W.Spencer, "Melbourne Solar Tables", CSIRO Division of Building Research Technical Paper No.7, 1974.
(Publications for the other capital cities are:

Sydney	DBRTP No.8	1975
Perth	10	1976
Hobart	14	1977
Canberra	22	1978
Brisbane	29	1979
Adelaide	47	1982)

15. J.W.Bugler and J.W.Spencer, "Rockhampton Solar Tables", CIAE, Rockhampton, 4700, 1975.

16. W.W.S.Charters and T.L.Prior, "Solar Energy, Theory and Design of Solar Thermal Systems", Victorian Solar Energy Council, 270 Flinders Street, Melbourne, 3000, 1982.

17. J.W.Bugler, "PRERAD Program Manual", CSIRO Solar Energy Studies, November, 1975.

18. "Solar Radiation Incident on Inclined Surfaces in Melbourne", CSIRO Solar Energy Studies Report No.SR-MEL-1, 1977.

19. "Solar Radiation Incident on Inclined Surfaces in Williamtown", CSIRO Solar Energy Studies Report No.SR-WIL-1, 1978.

MONTHLY AVERAGE VALUES OF DAILY SOLAR IRRADIATION FOR ROCKHAMPTON (CIAE), OVER THE 10 YEARS 1975-84

CALCULATED FROM HOURLY MEASURED GLOBAL HORIZONTAL IRRADIATION USING BUGLER MODEL

IRRADIATED PLANES FACING NORTH AT VARIOUS INCLINATION ANGLES

UNITS ARE MJ/m^2day

ANGLE TO HORIZONTAL	JAN	FEB	MAR	APR	MAY	JUN	JUL	AUG	SEP	OCT	NOV	DEC	YEAR AVE	ANGLE TO HORIZONTAL
0°	21.1	19.5	18.7	16.7	13.5	13.3	13.8	16.5	19.7	21.7	23.0	23.5	18.4	0°
15°	20.5	19.2	19.4	18.3	15.6	16.0	16.4	18.5	20.8	21.8	22.2	22.2	19.2	15°
30°	18.6	18.0	19.1	19.0	16.8	17.9	18.0	19.6	20.9	20.8	20.3	20.0	19.1	30°
45°	16.1	16.1	17.8	18.7	17.2	18.8	18.7	19.7	19.9	18.8	17.6	16.9	18.0	45°
60°	13.0	13.5	15.8	17.4	16.7	18.7	18.4	18.7	17.9	16.0	14.3	13.4	16.2	60°
75°	9.7	10.5	13.0	15.3	15.3	17.5	17.1	16.8	15.2	12.6	10.6	9.7	13.6	75°
90°	6.8	7.5	9.7	12.5	13.2	15.3	14.8	14.0	11.7	8.9	7.3	6.8	10.7	90°
FOR A PLANE THAT IS ALWAYS NORMAL TO THE SUN-EARTH VECTOR (SUN-TRACKING):														
-	25.9	23.5	24.6	24.0	20.7	22.6	22.5	24.5	26.4	27.0	28.0	29.0	24.9	-
BEAM RADIATION ONLY (AS USED BY CONCENTRATING COLLECTOR):														
-	18.1	16.0	18.1	18.5	16.1	18.8	18.2	19.1	19.7	19.6	20.1	21.3	18.7	-

TABLE 1

MONTHLY AVERAGE VALUES OF DAILY SOLAR IRRADIATION FOR ROCKHAMPTON (CIAE), OVER THE 10 YEARS 1975-84

CALCULATED FROM HOURLY MEASURED GLOBAL HORIZONTAL IRRADIATION USING BUGLER MODEL

IRRADIATED PLANES AT 23.3° TO HORIZONTAL AT VARIOUS AZIMUTH ANGLES

UNITS ARE MJ/m^2day

AZIMUTH	JAN	FEB	MAR	APR	MAY	JUN	JUL	AUG	SEP	OCT	NOV	DEC	YEAR AVE	AZIMUTH
-90°	20.6	18.5	17.8	15.7	12.5	12.5	13.1	15.7	19.0	21.1	22.1	22.5	17.6	-90°
-60°	20.2	18.6	18.5	17.1	14.2	14.7	15.1	17.4	20.1	21.4	21.8	22.0	18.4	-60°
-30°	19.8	18.6	19.1	18.2	25.7	16.4	16.7	18.7	20.8	21.4	21.5	21.4	19.0	-30°
0°	19.6	18.6	19.3	18.8	16.4	17.2	17.4	19.3	21.0	21.3	21.3	21.1	19.3	0°
30°	19.7	18.7	19.2	18.5	16.1	16.7	16.9	18.8	20.7	21.1	21.4	21.3	19.1	30°
60°	20.1	18.8	18.8	17.6	14.9	15.1	15.4	17.6	19.8	20.8	21.6	21.8	18.5	60°
90°	20.4	18.7	18.1	16.3	13.2	12.9	13.4	16.0	18.8	20.4	21.8	22.3	17.7	90°

TABLE 2

MONTHLY AVERAGE VALUES OF DAILY SOLAR IRRADIATION FOR ROCKHAMPTON (CIAE), OVER THE 10 YEARS 1975-84

CALCULATED FROM HOURLY MEASURED GLOBAL HORIZONTAL IRRADIATION USING BUGLER MODEL

VERTICAL PLANES FACING THE CARDINAL DIRECTIONS

UNITS ARE MJ/m^2day

AZIMUTH	JAN	FEB	MAR	APR	MAY	JUN	JUL	AUG	SEP	OCT	NOV	DEC	YEAR AVE	AZIMUTH
0°	6.8	7.5	9.7	12.5	13.2	15.3	14.8	14.0	11.7	8.9	7.3	6.8	10.7	north
90°	11.9	11.3	11.3	10.4	8.4	8.2	8.4	10.0	11.2	11.8	12.7	12.9	10.7	east
-90°	12.2	11.1	10.8	9.6	7.5	7.6	8.0	9.7	11.7	12.7	12.9	13.2	10.6	west
180°	8.6	6.9	5.5	4.6	3.8	3.3	3.6	4.5	5.6	6.7	8.5	9.6	5.9	south
north + south combined	15.4	14.4	15.2	17.1	17.0	18.6	18.4	18.5	17.3	15.6	15.8	16.4	16.6	n + s
east + west combined	24.1	22.4	22.1	20.0	15.9	15.8	16.4	19.7	22.9	24.5	25.6	26.1	21.3	e + w

TABLE 3

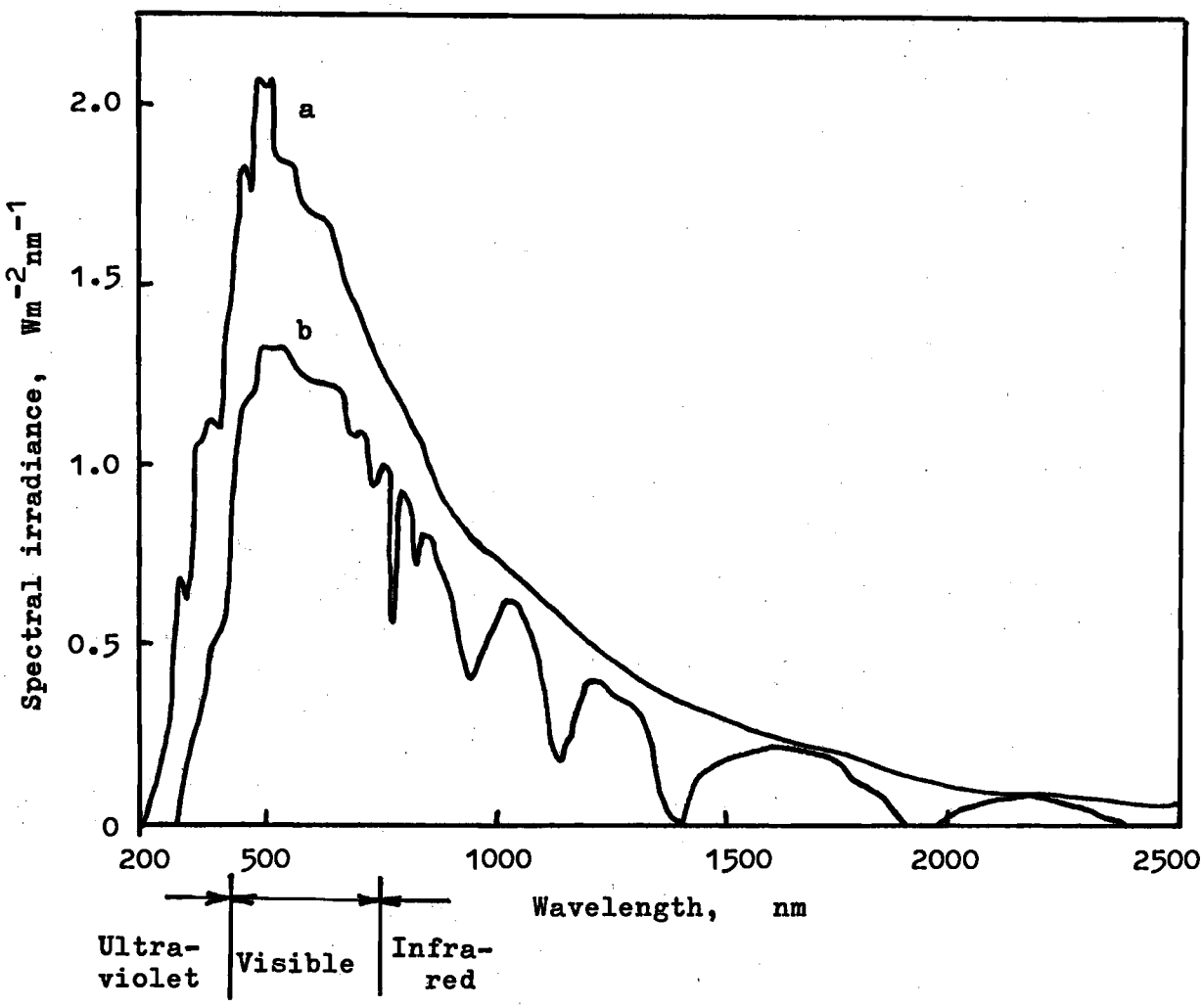

Figure 1. Spectral distribution of solar irradiance:
(a) The solar constant;
(b) Irradiance at earth's surface for solar altitude of 60°.

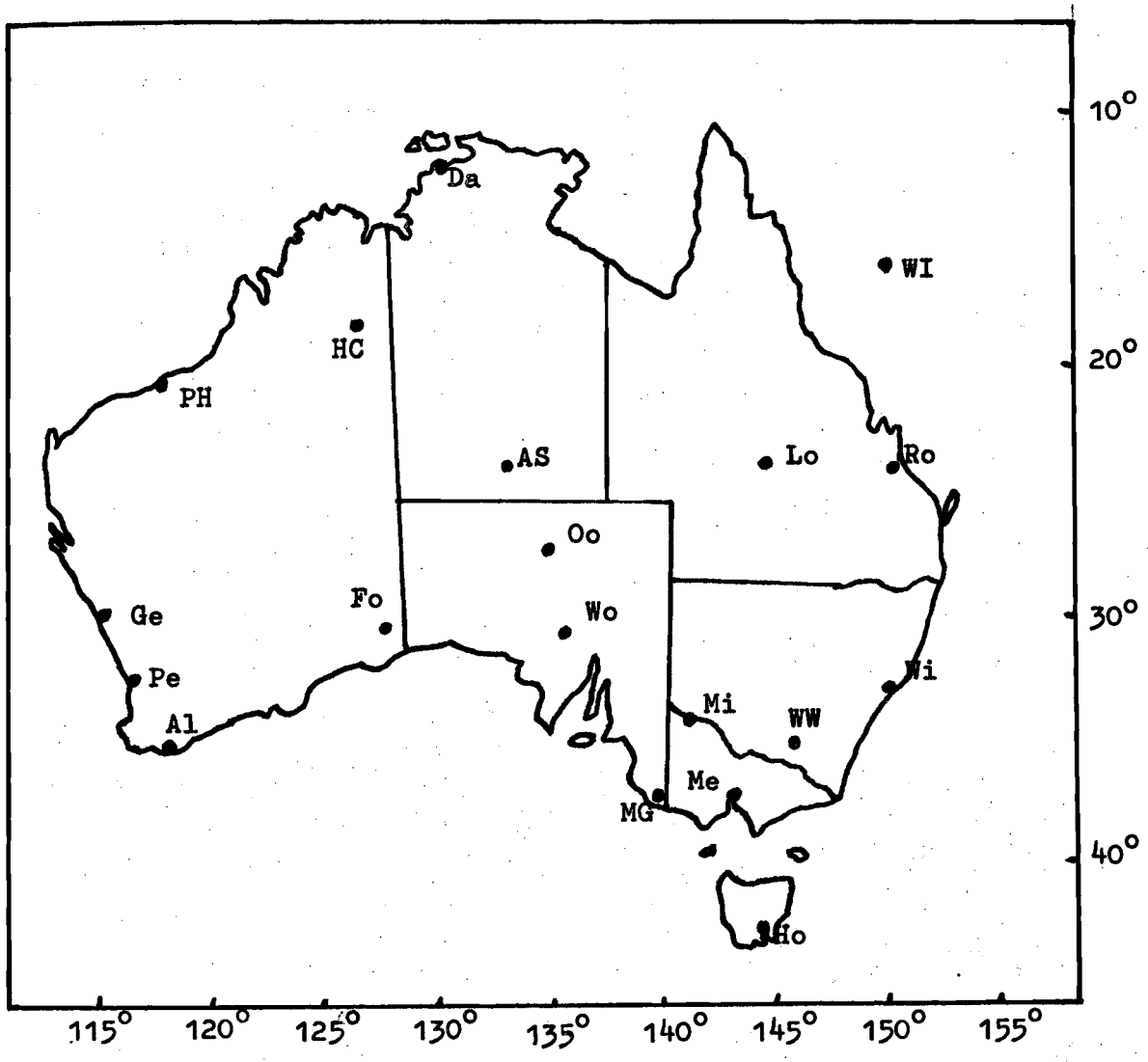

Figure 2. Australian Bureau of Meteorology stations at which half-hourly global solar irradiation is recorded.

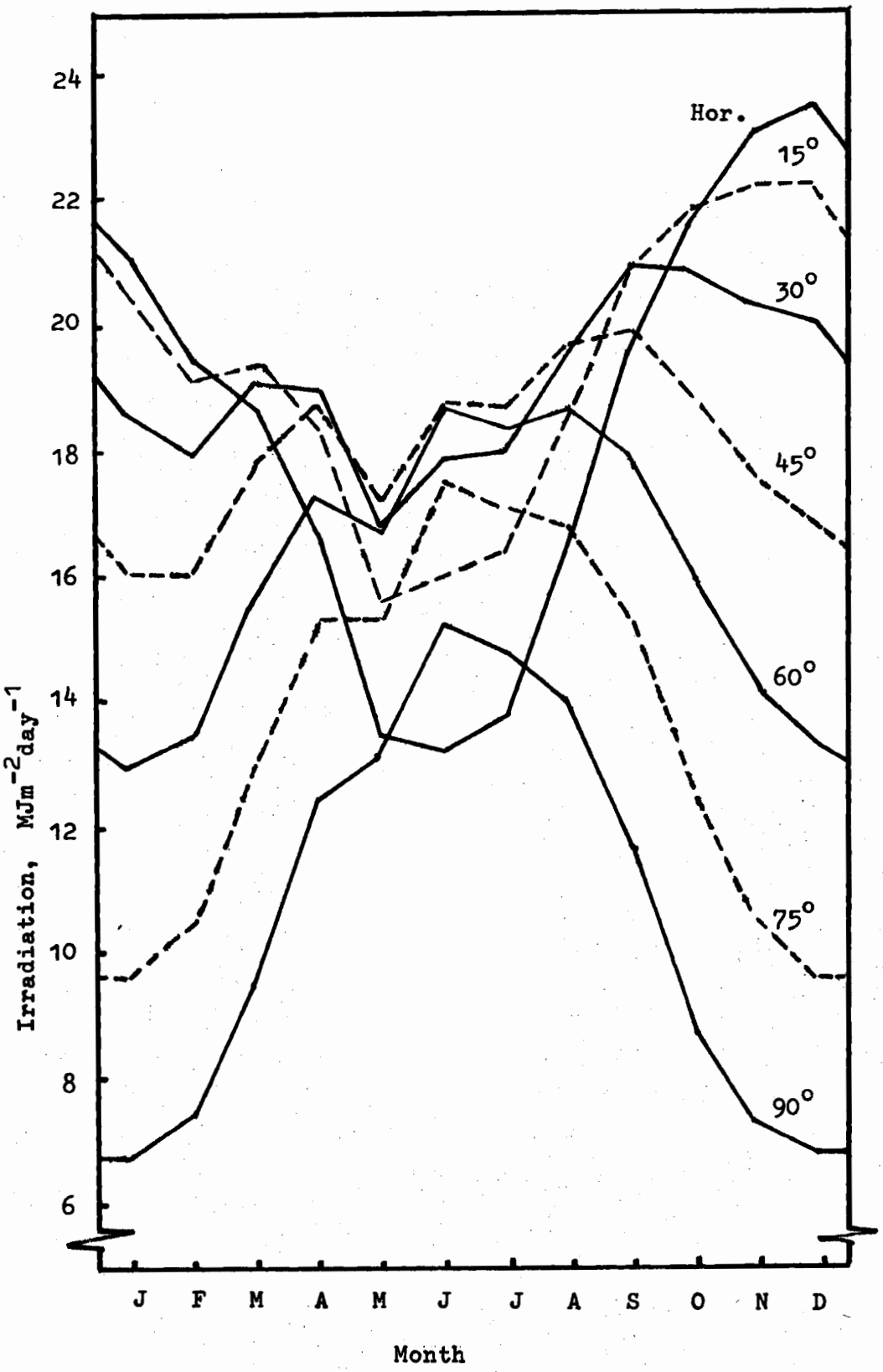

Figure 3. Solar irradiation on north facing planes for Rockhampton (CIAE) - Monthly averages for the 10 years 1975 - 1984.

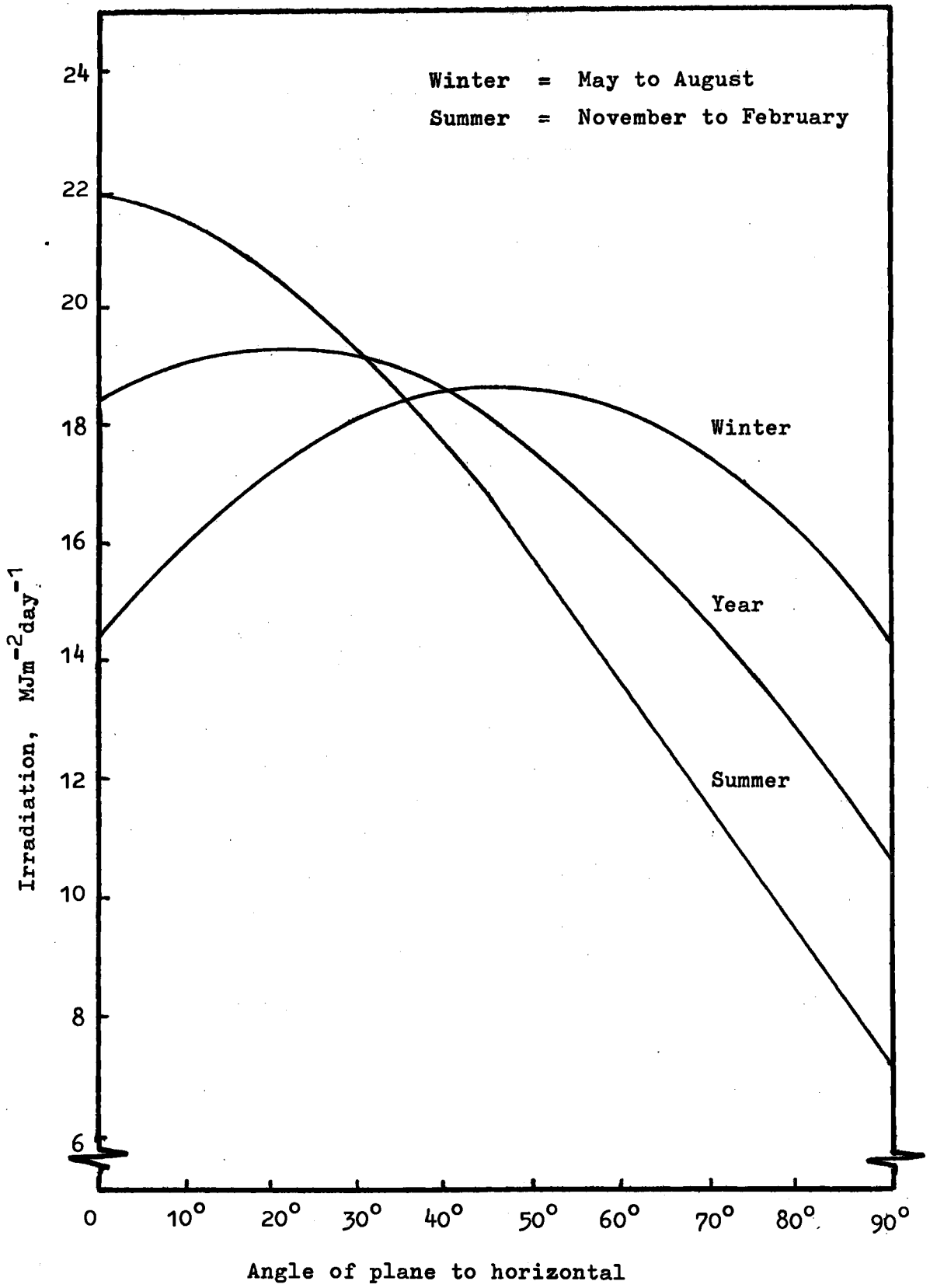

Figure 4. Solar irradiation on north facing planes for Rockhampton (CIAE) - Seasonal averages for the 10 years 1975 - 1984.

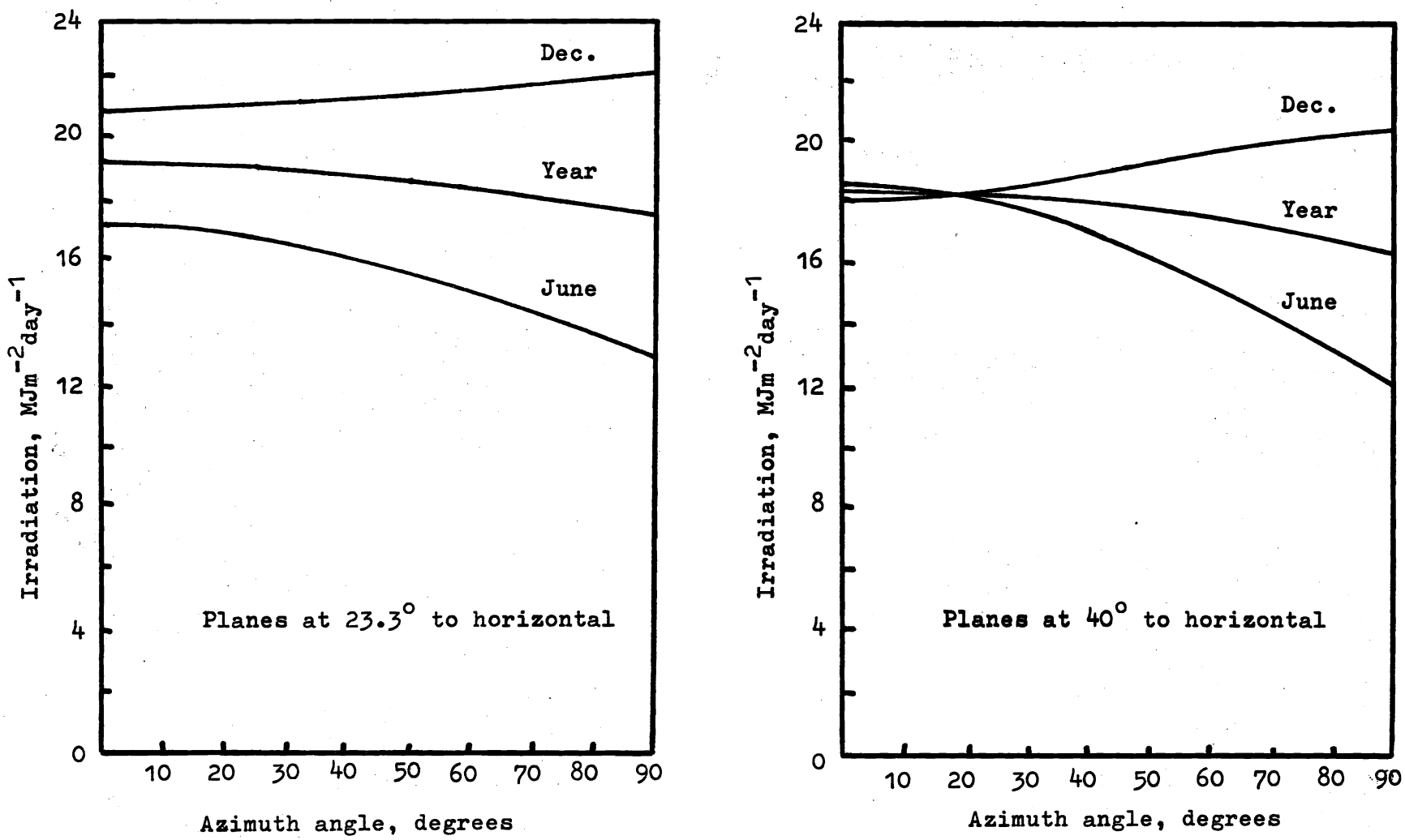

Figure 5. Monthly average solar irradiation for Rockhampton (CIAE) for the 10 years 1975-84. The effect of azimuth angle.

APPENDIX

STATIONS AT WHICH THE AUSTRALIAN BUREAU OF METEOROLOGY RECORDS HALF-HOURLY HORIZONTAL SOLAR IRRADIATION

Station	Lat. deg.S	Long. deg.E	Commenced
Albany	34.9	117.8	June 1968
Alice Springs	23.8	133.9	July 1968
Darwin	12.4	130.9	Oct. 1968
Forrest	30.8	128.1	Nov. 1969
Geraldton	28.8	114.7	June 1968
Hall's Creek	18.2	127.7	May 1969
Hobart	42.8	147.5	Oct. 1967
Laverton	37.9	144.7	Feb. 1968
Longreach	23.4	144.3	July 1968
Melbourne	37.8	145.0	Jan. 1967
Mildura	34.2	142.1	Jan. 1969
Mount Gambier	37.7	140.8	July 1968
Oodnadatta	27.6	135.4	May 1969
Perth	31.9	116.0	Oct. 1972
Port Hedland	20.4	118.6	Sep. 1968
Rockhampton	23.4	150.5	Feb. 1973
Wagga Wagga	35.2	147.5	July 1968
Williamtown	32.8	151.8	Dec. 1968
Willis Island	16.3	150.0	July 1977
Woomera	31.1	136.8	Aug. 1968

SOLAR TRACKING AND ITS USES

Mr P Boyd and Mr D Little

Solar Tracking Systems Aust. Ltd.

BACKGROUND ON THE SUNTRAC SOLAR HOT WATER SYSTEM

Over 20 years ago, the Inventors of the unit, the Little Brothers of Mount Isa started looking for a simple method of tracking the path of the sun. Many experiments failed. Sometimes several years passed without any experimental work taking place. Eventually in 1976, they built a crude device which worked. This posed a problem. None of the brothers had studied solar and were almost toally ignorant in this regard. What to do with it?

They soon discovered that the only mass market likely to be immediately open to them was for domestic hot water. Now eight years after the sale of their first domestic machine, this is still the main market. The design won for the brothers, the A.B.C. INVENTOR OF THE YEAR AWARD IN 1978. A GOLD MEDAL at the International Exposition of Inventors in Geneva & the World Health Organisation Medal for appropriate technology for developing countries were also awarded to the Littles, and later Mr. David Little won an Advance Australia Award.

In recent months, Solar Tracking Systems (Australia) has begun building demonstration systems for industrial applications which have been remarkably successful.

The first was basically an enlarged version of the domestic machine using 4 metre long collectors, heat pipes and a 2,000 litre storage tank. This system incorporates heat exchangers which recover waste heat from adjoining cold room refrigerators. It is an excellent combination.

The second was a pool heating system. This has been dramatic. In the poor solar months of August and September, the pool temperature has been maintained at 34°C with absolutely minimal auxilliary heating even though a pool blanket is rarely used. 34°C is required to allow small children to stay in the water for extended periods.

It is natural for people to consider high performance concentrating collectors only for high grade heat. This would rule out pool heating as an application for "SUNTRAC". In practice, the low grade heat required for pools cannot be provided in cold windy, yet sunny conditions using the cheaper methods. These are precisely the conditions likely to prevail in winter when pool heating is most needed. Particularly for training pools.

The latest application is very exciting. We built a 10,000 litre storage tank and an array of "SUNTRAC" collectors to heat it. Electrical heater elements were incorporated as an auxilliary. To this storage, we added a small mixing tank and thermostatically controlled pump which maintains a mixing tank temperature of 27°C. This warm water is circulated via 25 mm poly pipe through the root zone of a hydroponic nursery. Again the results have been outstanding. Root zone heating of nurseries has enormous potential.

As we complete each project, it is documented and the information is distributed through our dealer network and to other interested parties.

Solar Tracking Systems hav also built a stand alone tracking platform for photovoltaic cells. Again the system shows great promise. Unfortunately, it is not possible for a small Company to cover all the potential in one hit and we have decided to pursue our goals, one at a time. This is very frustrating but the only way.

For more detail on Solar Tracking Systems, refer to our brochures. The economics are quite attractive to the customers usually having a payback period of about four years.

Solar Tracking Systems (Australia) Pty Ltd

P.O. Box 368 Strathpine, Brisbane. 4500. Queensland, Australia.

HEAD OFFICE & FACTORY
16 Johnstone Rd. Strathpine, Brisbane. 4500. Queensland, Australia.
Telephone **(07) 205 7144.**
Telex 43311 SUN RAC

Simply a more efficient solar heating system.

INFORMATION AND TECHNICAL DATA ON THE SUNTRAC HOT WATER SYSTEM.

The Inventor, Mr. Dave Little, appeared on the ABC "The Inventors" programme with this unit and was awarded the "Inventor of the Year" for 1978 in Australia. As a result of this Award, the unit was displayed at the International Salon of Inventors, Geneva, Switzerland, where it gained the Gold Medal Award for the energy and environment section and the World Health Organisation awarded Messrs. Dave and Adrian Little their medal for the development of technology considered appropriate for developing countries. The unit was subsequently displayed at U.N. Headquarters in Geneva. The system has been acclaimed by the general public, engineers and scientists from around the world including engineers and scientists in the forefront of solar research.

There are four main reasons for the superiority of "SUNTRAC"

Energy Concentration

Like a magnifying glass the twin 1.7 square metre parabolic collectors concentrate the sun's energy on to a small area. The heat pipes collect this concentrated energy and transport it efficiently into the storage tank. Even weak morning or afternoon sunlight is concentrated to temperatures exceeding boiling point and so adds worthwhile energy. This does not occur with flat plate systems as the unconcentrated sunlight in weak conditions cannot raise the temperature of the water in the plates above the temperature of the water already held in the storage tank and so no energy is added. This is particularly relevant when the electric booster is being used in winter or poor weather. The flat plate simply cannot attain sufficient heat to cause convection to start. The booster can be used in the same conditions with "SUNTRAC" in the knowledge that even weak sunlight will add energy to the tank. Using off peak with a flat plate system the water will be hot in the morning from the booster and the sun will add nothing. You virtually have an expensive electric system with perhaps just a little energy added in the hottest part of the day. With "SUNTRAC" energy will be added right up until boiling point is reached so less electricity will be used.

Tracking Mechanism

We have developed a Heat Differential Tracking Switching System primarily for solar applications. This system requires no electric motors, gears, electronic or solar cells, is very simple, extremely sensitive with simple components. The principal involves the use of air expansion and contraction due to temperature changes to trigger water valves connected to a diaphragm.

There is an air tight expansion tube below and square to the collectors on each side. These in turn are connected to an air diaphragm which has a connecting rod to activate two water valves.

When the sun rises in the East it shines on the eastern expansion tube while the western tube is in the shade. The expansion of air in the eastern tube forces the diaphragm to the right opening a water valve. This allows the water mains pressure to enter the water operated ram forcing the push rod to turn the collectors to the East. When the collectors become square to the sun, both tubes are equally exposed which places the diaphragm in the neutral position shutting both water valves.

As the sun moves to the West, it will shine on the western expansion tube opening another water valve which allows water to escape from the water operated ram. This turns the collector towards the sun until the tube is in shade again.

In operation the system tracks on to the morning sun and gives a steady bleed off during the day to keep square to the sun until it sets in the West. The western tracking force is provided by a counter spring.

The Tank

The 280 litre heavily insulated tank is made of rotationally moulded polyethelene CL 100. This material will stand up to the boiling temperatures produced in "SUNTRAC" units and will not corrode, requires no sacrificial anodes as most flat plate tanks do, and therefore is maintenance free in this regard.

The tank is fully vented and under no pressure. When the unit reaches boiling point steam is free to escape to the atmosphere and pressure does not build up in the tank. Mains pressure hot water is drawn from the unit by means of a copper heat exchange coil in the tank. When a hot tap is turned on cold mains water enters the coil which is immersed in the 280 litres of hot water held in the storage tank. As the cold water flows through this coil it becomes heated by the surrounding hot water thus giving the consumer mains pressure hot water.

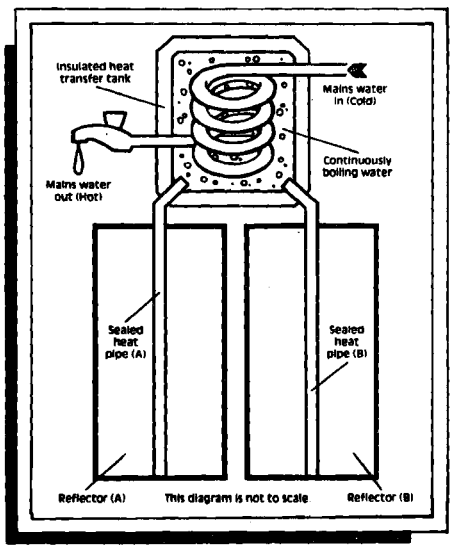

HEAT DIFFERENTIAL TRACKING SYSTEM

Gravity Heat Pipes

The gravity heat pipe at the focal axis of our collectors has remarkable properties. Apart from its remarkable supersonic vapour heat transfer properties, it acts as a valve or diode, only allowing heat to be transported upwards into the storage tank and never downwards and out of the tank. When heat is not being applied to the section in the collector, the heat transferring water vapour condenses in the bottom few centimetres of the pipe leaving a vacuum in the rest of its length up into the tank. Thus there is nothing to carry heat out of the tank. The other critical advantage is its ability to withstand sub zero temperatures without damage as even if it should freeze the liquid in the pipe occupies only a small perecentage of the pipe's volume and thus has plenty of room to allow for ice expansion without damage. Freezing of the small pipes in flat plates is a major problem requiring frost protection usually using either an electric element to keep the plate above freezing point.

Other advantages held by the "SUNTRAC" system include the tendency because of its movement and curved surface, for the collector surface to remain cleaner and require less frequent hosing down than a flat plate system in an adjoining locality. Another is the hail and shock resistant acrylic cover with full warranty. The glass covers of our competitors are not covered by their warranties as a rule.

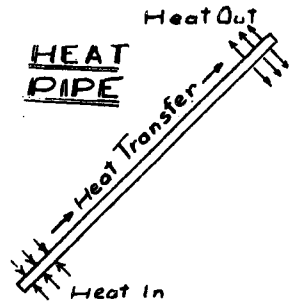

Gravity Heat Pipe Operating Principle

If a copper tube has all the air evacuated from it and is sealed with a small quantity of distilled and de-gassed water inside, it becomes a remarkable device.

Under vacuum the water commences to boil at room temperature until vapour pressure increases and boiling stops. If, however, the top section of the pipe is kept cooler than the lower section, vapour will flow from the hotter section to the cooler section at supersonic speed. The vapour then condenses, losing its latent heat through the walls of the tube. The condensed vapour, liquid water, then runs back down the tube completing the cycle. This principal can be used as a remarkably efficient method of heat transfer or heat recovery from hot wastes. We believe we are the only firm manufacturing heat pipes in Australia. The manufacturing process is a little more complex than would at first appear as great care must be taken to get all the air out of the water and out of the metal. This requires boiling and condensing under vacuum. Also particular grades and brands of copper need to be used. For example, any graphite in the copper from the pipe extrusion dye will spoil the performance.

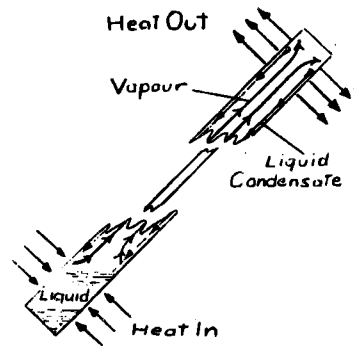

HELPFUL HINTS

What is the Hot Water Output?

The Twin Collector, over a 10 hour period of clear sunshine will produce 15 KW of heat energy. This is sufficient to heat approx. 508 litres of water (113 gall.) to shower temperature of 46° C (115° F) from a cold water temperature of 21° C (70° F). Every hour of cloud will cut this figure by 10%. Haze, shadow, dirty collectors, early morning dew will all have an effect. Five minutes under the shower with a small rose will use 65 to 85 litres (15-20 gall.) of water. A large rose will double the consumption without improving the shower.

How much does a Dishwasher or Washing Machine Consume?

About 65 litres each. These 2 appliances however are heavier consumers than it first appears as they are usually connected straight to the hot water line and are not mixed with cold. The 65 litres could be at 90° C and so have the effect of using 3 times as much water at 42° C, therefore each appliance is equivalent to 30 mins. under the shower.

How much does it cost to use the Booster?

Very little, as the water will be usually well above the cold water temperature, also the excellent insulation of the tank means that heat losses are minimal. The machines are installed with a separate switch. As with all solar water heaters the booster is necessary if demand is greater than the system is designed for, or for the prevailing weather conditions. The system is designed to be supplied to the consumer in a fully assembled condition. This will cut down installation costs considerably, factory assembly being cheaper than on site tradesmen assembly.

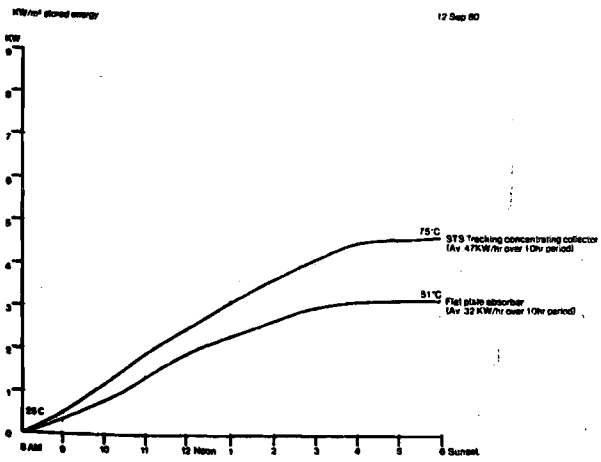

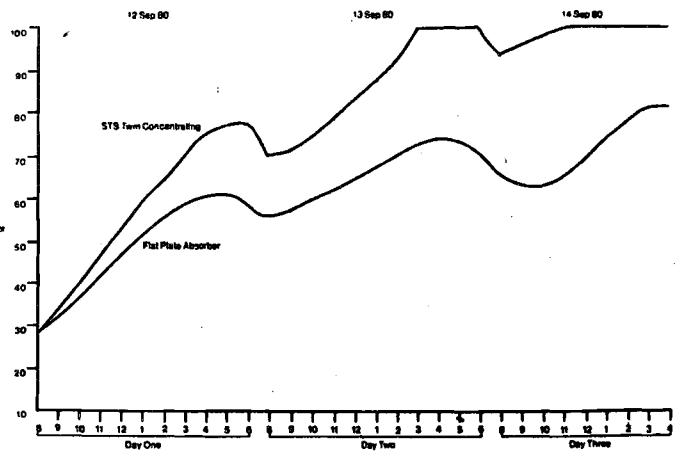

WIND ENERGY POTENTIAL FOR SOUTH EAST QUEENSLAND

Mr T D Berrill, Mr P Fries

WIND ENERGY POTENTIAL FOR SOUTHEAST QUEENSLAND

Trevor D. Berrill
Peter O. Fries

Renewable Energy Services
Brisbane, QLD

ABSTRACT

The traditional use of wind energy conversion systems (WECS) for electrical power production or mechanical work is well-demonstrated and cost-effective where there exists sufficient wind energy resource. Verifying the extent of the wind energy resource is a necessary but often difficult and hence neglected activity. This paper will outline the reasons for establishing the nature and extent of wind energy resources in SE Queensland, and the present work being done by private and public authorities. It also presents a case study of two sites north of Brisbane , one site on the coastline and the other 20Kms. inland on the Eastern edge of a coastal range. Both sites are potentially useful wind energy sites but demonstrate some markedly different characteristics in available wind energy.

I. INTRODUCTION

The use of wind energy technologies has evolved rapidly since the 1970's. Previously used for water pumping and small domestic electrical power production, Wind Energy Conversion Systems (WECS) are now used to generate significant amounts of electrical energy for utility grids and stand-alone power systems. A new concept of "wind farming" has created areas where of thousands of WECS sieve power from the wind. In the United States alone, Wind farms are contributing the electrical energy for an estimated 70 000 homes with an installed capacity approaching 1000 Mw.

Finding the best wind energy resource is not always an easy task. It is a very site specific resource that follows basic patterns but can be severly affected by local topography, flora, and lattitude. The need for careful and methodic monitoring of wind speed is essential in establishing the most cost-effective approach to a WECS design and installation.

There also exists a special cubic relationship between the wind speed and the power that can be extracted from the wind. This means that small increases in wind speed for a given location can result in substantial increases in available wind energy at that site. To illustrate the significance of this point, consider two sites whose mean windspeeds are 3.5 m/s and 4.0 m/s respectively. Although the second site has a mean windspeed only 14 percent more than the first, it will have 78 percent more energy available from the wind. (for a description of power and neergy formulae, see: "A Wind Energy Guide for Australia", published by Brisbane Wind Energy Association, c/- Dept. of Mechanical Engineering, University of Queensland)

II. WIND ENERGY ASSESSMENT METHODS

The methods used to establish windspeed data range from assessment of Met Bureau visual observations to sophisticated monitoring using recording anemometers. The most suitable method of measuring windspeed for wind energy applications is to record mean hourly windspeeds using recording anemometers for each hour of the day in an area that has a clear access to winds from all directions. The standard height used by the Met Bureau is 10m but higher elevations of 20m and 30m are more representative of the operating heights of well-sited WECS. One such recording anemometer, developed in Queensland by Mr Neville Jones and Mr Barry Daniel of the University of Queensland, is the ANAREC recording anemometer.

Met Bureau data is often unuseable to the wind energy designer as the data is either visually recorded (the way a flag is flapping, for example) or recorded in sheltered areas that do not have a clear access to the wind (the Brisbane downtown Met Bureau anemometer, for example).

The most prefered method to establish the wind regime is to record hourly mean windspeeds at a site over a one-year period to account for seasonal variations in wind patterns. Shorter periods can be used by correlating data to sites that have longer records of recorded wind data . This method is limited to sites in close proximity that have similar exposure to prevailing winds. As mentioned earlier, surface roughness and topography can severly affect the distribution of wind patterns in an area making correlation unreliable.

In addition to sophisticated monitoring equipment such as the ANAREC recording anemometer, less expensive methods can be used by individuals to establish wind energy potential at farm or bush sites. One of these is the CASIO HR-5 calculator with modifications made by Mr Barry Daniel of the University of Queensland (see Electronics Australia, 1984). Information is collected by paper tape and must be manually tabulated. Typically, the cost to record windspeeds over a one year period can range from $200-2000 depending on the type of equipment utilized.

Windspeed data is published as either tabular data or as wind roses where direction is also measured. A number of publications are available regarding wind patterns including "Wind Rose-Map, set of 8, Climatic Atlas of Australia" (Aust. Govt Publishing Service), "The Winds of NSW" (Energy Authority of NSW, Nov 1984), "Climatic Data and its Use in Design" (Szololay, RAIA Educ. Div., Nov 1982), and "A Wind Survey of Australia" (South Wind, Dec 1982)

III. WIND PATTERNS OF SE QUEENSLAND

South-East Queensland is an area that extends from the NSW border north to Gympie and inland to the Darling Downs. The major topographical feature is the Great Dividing Range which runs North-South approximately 100 kms inland. This range separates the inland areas from the coastal zone. A number of smaller coastal ranges such as the Blackall and D'Aguillar Ranges also strongely deflect the prevailing winds.

The coastal zone includes all islands off the coast and is characterised by sea-breezes and prevailing winds resulting from the movement of high and low pressure systems moving across the contintent. Winds in this zone in the summer are predominately the summer 'sea breezes' from the North-East and East and decrease in intensity as they move inland.

Autumn winds are generally from the South-East while winter winds are generally from the west. Wind potential seems to be greatest in the coastal zone. Sites such as the Double Island Point Lighthouse[1] show a mean annual windspeed of 6.7 metres/sec (m/s).

The sea breezes (see appendix - Figure 1.) result from the differential heating of the land and sea. The on-shore sea breeze starts in the late morning, reaching its maximum mid-afternoon when the land has reached its highest temperature, and dying away at sunset. An off-shore sea breeze may result at night if the sea becomes substantially warmer than the land. On-shore breezes are generally much stronger than off-shore breezes and can reach speeds in excess of 10 m/s. The maximum penetration of the sea breeze effect is not likely to be greater than 100 Km inland and is more likely to be 10 Km.

Inversion layer effects[2] appear to be common to both coastal and inland areas, particularly in low flat terrain. Inversion layers form a layer of cooler, denser air close to the ground at night. This is a thermally stable condition which effectively dampens the surface air movement and reduces the average wind speed. The inversion effect can be initiated by frontal passages, sea breezes and katabatic air-flows (cool air flowing down from mountain at night) and can extend to the coastline, particularly in low lying areas. The result can be a substantial reduction in the available wind energy. Temperature inversion is most likely to occur during winter when the passage of high pressure systems produces clear skies and light winds.

Topographical features[3] (see appendix - Figure 2.) will also strongly effect wind speeds at any site. Wind speeds are increased when air is forced to flow over elevated terrain such as mountains, ridges and, to a lesser extent, isolated hills. The windspeed may be increased by as much as a factor of 2, resulting in an 8 fold increase in the energy in the wind. However, turbulence and wind shear are often increased over such terrain. In general, hills or ridges with gentle slopes, few trees and oriented perpendicular to the prevailing winds are preferred.

Careful consideration must also be given to certain aspects of the wind data, particularly to lull periods where the mean hourly recorded wind speed falls below a predetermined cutoff level. Wind data must also be related to the types of WECS that would be considered for a site. Each WECS has an established "cut-in" wind speed, a "rated-windspeed", and a "shut-down" or "furling" wind speed. The "cut-in" windspeed is the wind speed that a WECS will begin to generate power or mechanical work. For electricity generating WECS, this is typically between 3 and 5 m/s,

while the "rated-windspeed" refers to the maximum output of the WECS at a given windspeed, usually 9-15 m/s. The "furling" windspeed refers to the windspeed at which a WECS will stop generating power and is approximately 20 - 30 m/s.

These characteristics of WECS should be carefully matched to the windspeed characteristics at each site to ensure optimum energy production from a given size WECS. Recommended rules of thumb for WECS characteristics when related to annual mean windspeed (V_A) at a given site are:

(1) Cut-in Windspeed = $0.6 \times V_A$
(2) Rated Windspeed = $2.0 \times V_A$
(3) Furling Windspeed = $5.0 \times V_A$

Current Monitoring Programs

Windspeed data has traditionally been collected by the Bureau of Meteorology and used for weather forecasting. The best windspeed records are those recorded at lighthouses along the coast and at some airports.

The Department of Mechanical Engineering at the University of Queensland has developed the ANAREC recording anemometerand is monitoring 7 sites within the SE region under grants from the Queensland Energy Advisory Committee and the National Energy Research Development and Demonstration Council (NERDDC). As part of the NERDDC project, a total of 17 sites in Southern Queenslsnd from the coast west to Windorah will be monitored for 2 years, beginning from May, 1985. In addition to determining mean windspeeds, and Weibull Distribution factors, the project will also investigate the effect of height with wind patterns, particularly the inversion layer effects.

A number of private companies, including Renewable Energy Services have been active in establishing wind energy potential. Anemometers can be leased for varying periods of time and data analysed for a set fee. Many clients have found this procedure to be the most cost-effective method of establishing wind energy potential.

IV. A CASE STUDY - Comparison of Mt. Mee and Beachmere - 1984/1985

These two sites have been monitored since January 1984 using data logging anemometers. Both property owners have used WECS for electricity generation during the last 4 years. The data loggers record the hourly mean windspeed and store this information in one of 18 windspeed ranges. They also produce a histogram of the number of hours the wind has blown in these windspeed ranges ie. frequency of occurrence of windspeeds.

The histograms are recorded below and summed to form an annual histogram. This data was then used to calculate monthly and annual mean windspeeds and is tabulated below. A more detailed comparison of wind patterns at the two sites was conducted by comparison of hourly data and daily histograms at each site for January and July, 1985. This data was further subdivided into night-time and day-time histograms. Wind direction data was obtained from Brisbane Airport Bureau of Meteorology recordings.

Site Descriptions (See Appendix - Maps 1. and 2.)

Beachmere

The site is located 50km north of Brisbane on the edge of Deception Bay. The anemometer is mounted on a 10m mast approximately 15m from the high-tide water level. Elevation above sea level is approximately 13m (including mast). It has excellent exposure to the NE, E, SE and S directions due to the Bay, but is sheltered by trees and a few houses from the N, NW, W and SW directions.

Mt. Mee

This site is 20km due east of Beachmere on the eastern edge of Mt. Mee, part of the D'Aguilar Range. The anemometer is mounted on a 14m mast at the end of a EW ridge. Elevation above sea level is 315m (including mast). The site has a clear view to the N, NE, E and SE over Deception Bay, Moreton Island, the Glasshouse Mountains and Redcliffe. To the NW, W and SW, the Mt. Mee plateau climbs slowly to 600m above sea level. The best exposure to winds is from the N, NE, E and SW directions. The SE winds are affected by a large tree and the complex shape of the surrounding terrain.

Results - 1984/85

Table 1. lists the number of hours the wind has blown in the ranges of windspeeds given below for 1984/85, eg. range H0 means windspeeds from 0 to 1 m/s, range H1 means windspeeds from 1 to 2 m/s etc.

NB. An anemometer calibration factor is still being checked by wind-tunnel tests but appears to be in the range +0.5 to +0.7 m/s over the windspeed ranges measured.

TABLE 1: Annual Histogram of Frequency of Occurrence (Hours)

	Beachmere		Mt. Mee	
	No. of hrs.		No. of hrs.	
Range	1984	1985	1984	1985
H0	946	457	947	281
H1	1851	897	1781	1050
H2	1222	622	1664	1439
H3	893	545	1172	1338
H4	768	556	646	679
H5	744	468	280	262
H6	482	352	142	100
H7	260	241	64	23
H8	131	117	19	4
H9	85	52	6	-
H10	30	34	-	-
H12	12	4	-	-
H14	2	-	-	-

TABLE 2: Monthly and Annual Mean Windspeeds (m/s)

	Beachmere		Mt. Mee	
Month	1984	1985	1984	1985
Jan	4.1	3.7	-	2.9
Feb	3.3	4.5	2.2	2.7
Mar	4.1	5.1	2.0	3.3
Apr	3.7	-	-	2.5
May	3.5	3.3	2.6	3.5
Jun	3.4	2.6	2.9	3.0
Jul	2.1	3.1	2.7	2.9
Aug	2.0	-	2.8	3.2
Sep	3.2	-	2.9	2.6
Oct	4.2	-	3.0	-
Nov	-	-	-	-
Dec	3.3	-	2.6	-
Annual	3.3	3.7	2.6	3.0

Results for January, 1985

TABLE 3. - Monthly Histograms of Frequency of Occurrence (Hours)

	Beachmere			Mt. Mee		
Range	Day	Night	Total	Day	Night	Total
H0	34	70	104	20	24	44
H1	70	81	151	86	119	205
H2	47	60	107	110	122	232
H3	90	49	139	95	61	156
H4	68	43	111	47	28	75
H5	22	15	37	7	15	22
H6	11	14	25	7	3	10
H7	13	6	19	-	-	-
H8	12	10	22	-	-	-
H9	4	9	13	-	-	-
H10	1	14	15	-	-	-
H12	-	1	1	-	-	-

TABLE 4. - Mean Windspeed $\bar{V}$ (m/s)

	Beachmere	Mt. Mee
Night-time $\bar{V}$	3.3	2.5
Day-time $\bar{V}$	3.5	2.9
Monthly $\bar{V}$	3.4	2.7

Tables 3. and 4. show the effects of elevation and surface roughness on night-time and day-time windspeeds as the 'sea breeze' becomes a 'land breeze' at night. The greater elevation at Mt. Mee ensures continuation of light 'land breezes' at night particularly in the H1 and H2 ranges (1 to 3 m/s).

Beachmere has more than twice the number of hours than Mt. Mee in the H0 range, particularly at night. This reults from the surface roughness and probable inversion effects which impede the light 'land breeze. However, the mean windspeed at Beachmere is still 26 percent greater than Mt. Mee due to Beachmere's unimpeded access to the NE 'sea breezes' and the SE trade winds which often continue through the night.

Tables 5.and 6.(see appendix) are the daily histograms for January for Beachmere and Mt. Mee. The calm and windy periods co-incide strongly at both sites. However, windspeeds at Beachmere are approximately twice those at Mt. Mee during windy periods (See Tables 5. and 6. for days 4, 6, 10, 18, 19, and 25).

This is due largely to the complex terrain at Mt Mee deflecting the SE trade winds to higher elevations.

Tables 7. and 8. (see appendix) list the hourly mean windspeeds recorded in the windspeed ranges used in tables 1., 3. etc. For example, a record of '4' represents the windspeed range 4 to 5 m/s. The 'boxed' windspeeds group together windsdpeeds equal to or greater than 3m/s. These are typical of the windspeeds at which a modern wind turbine would generate power.

These tables clearly show the 'sea breeze' effect between 1200 and 2000 hours. The effect is substantially reduced at Mt. Mee.

Results for July, 1985

TABLE 9. - Monthly Histograms of Frequency of Occurrence (Hours)

	Beachmere			Mt. Mee		
Range	Day	Night	Total	Day	Night	Total
H0	21	43	64	5	26	31
H1	90	173	263	78	53	131
H2	111	66	177	80	84	164
H3	52	23	75	81	89	170
H4	44	34	78	74	59	133
H5	22	17	39	41	38	79
H6	14	7	21	10	16	26
H7	14	2	16	2	6	8
H8	1	0	1	1	1	2
H9	2	4	6	-	-	-
H10	1	3	4	-	-	-

TABLE 10. - Mean Windspeed V (m/s)

	Beachmere	Mt. Mee
Night-time $\bar{V}$	2.4	3.3
Day-time $\bar{V}$	3.1	3.4
Monthly $\bar{V}$	2.8	3.4

Tables 9. and 10. (see appendix) show the likely effects of inversion layers at night which significantly reduce the windspeed at night at Beachmere but have little effect at Mt. Mee due to its greater elevation.

The Westerly winds are the prevailing winds during the winter months and Mt. Mee benefits from its better exposure to these winds. Tables 11. and 12. (see appendix) list the

daily histograms for July for Beachmere and Mt. Mee. The windy and calm periods do not always occur at the same time at both sites due to the differing exposure to prevailing winds. Inversion layer and roughness effects tend to further reduce the windspeeds at Beachmere.

The results for July are a reversal of the January results in some aspects. For example, the mean windspeeds are reversed, and the windy and calm periods do not co-incide very well. The 'sea breeze' effect is largely reduced although the occurrence of SE winds during winter benefits Beachmere. This is shown in Table 10. for days 8 and 23.

Tables 13. and 14. (see appendix) list the hourly mean windspeeds at both sites for July. These are again 'boxed' in groups equal to or greater than 3 m/s. The 'useable' windspeeds (above cut-in windspeed, taken as 3 m/s) are much more evenly distributed between night-time and day-time, particularly at Mt. Mee. The high occurrence of calm periods (H0 to H2 ranges) resulting from inversion layer effects, is also noticeable at Beachmere.

On an annual basis, Beachmere has 88 percent more wind energy available than Mt. Mee. However, Mt. Mee is still a useable wind energy site, requiring a higher tower (20 to 25m. appprox.) on which to mount a WECS.

V. CONCLUSIONS

Although WECS can provide significant amounts of energy, a careful evaluation of the wind energy resource needs to be made. This is best accomplished through careful evaluation of terrain and recording hourly mean windspeeds for a minimum one year period.

In South-East Queensland, favourable sites can be found on or near the coastal areas, with the best sites having an unrestricted access to winds from the NE, SE and SW directions, particularly on ridges that run N-S.

Once collected and analysed, hourly windspeed data can be used to select the most suitable WECS for your site.

Current wind energy monitoring programmes underway at the University of Queensland should help to establish wind patterns and wind energy potential throughout Southern Queensland.

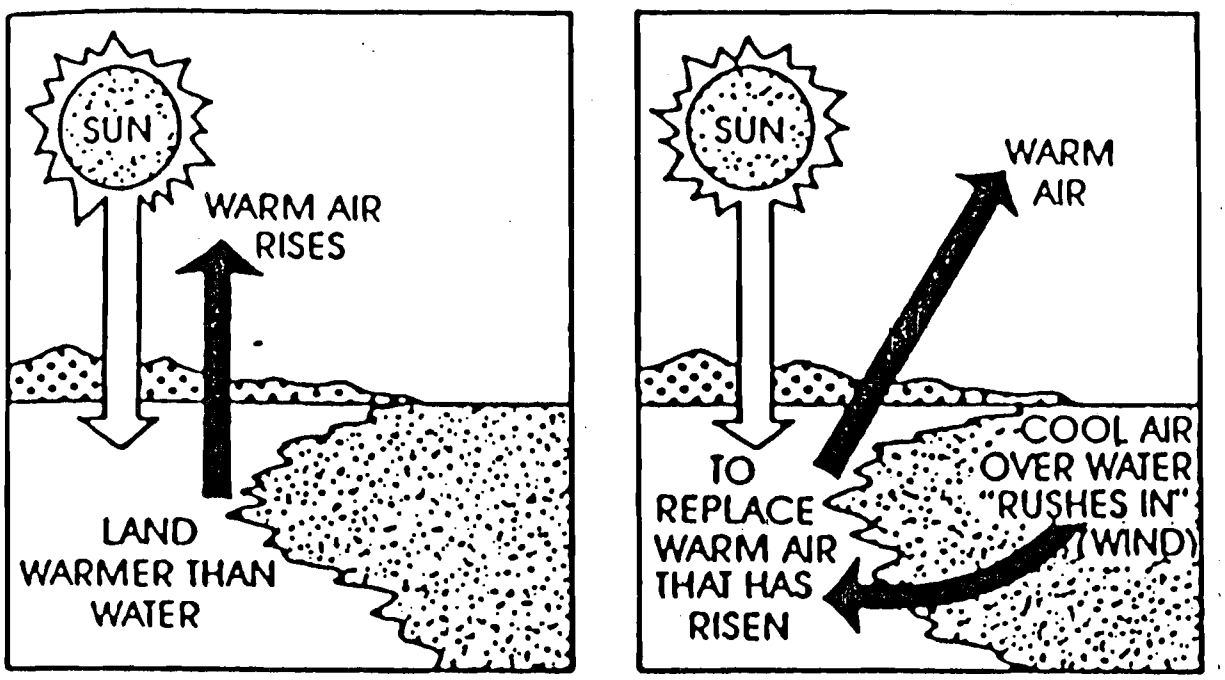

FIGURE 1. – FORMATION OF A LOCAL SHORELINE BREEZE

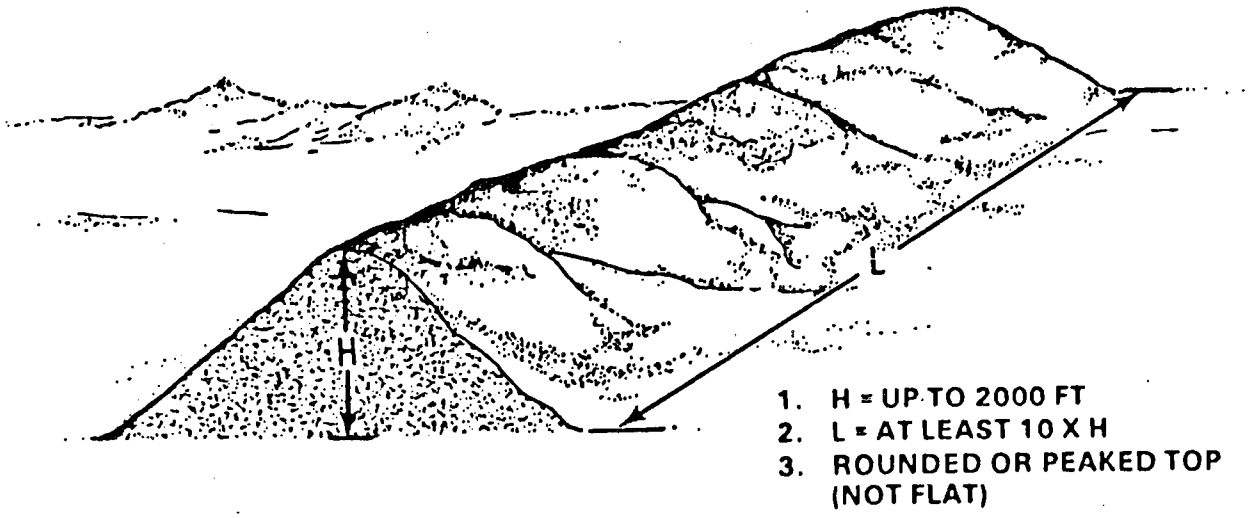

FIGURE 16. Definition of a Ridge

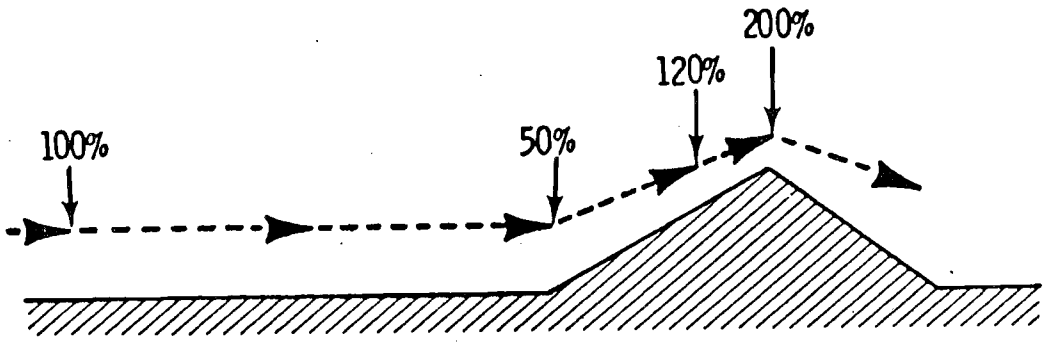

MAP 1.—AUSTRALIA 1:50,000 EDITION 1 - AAS

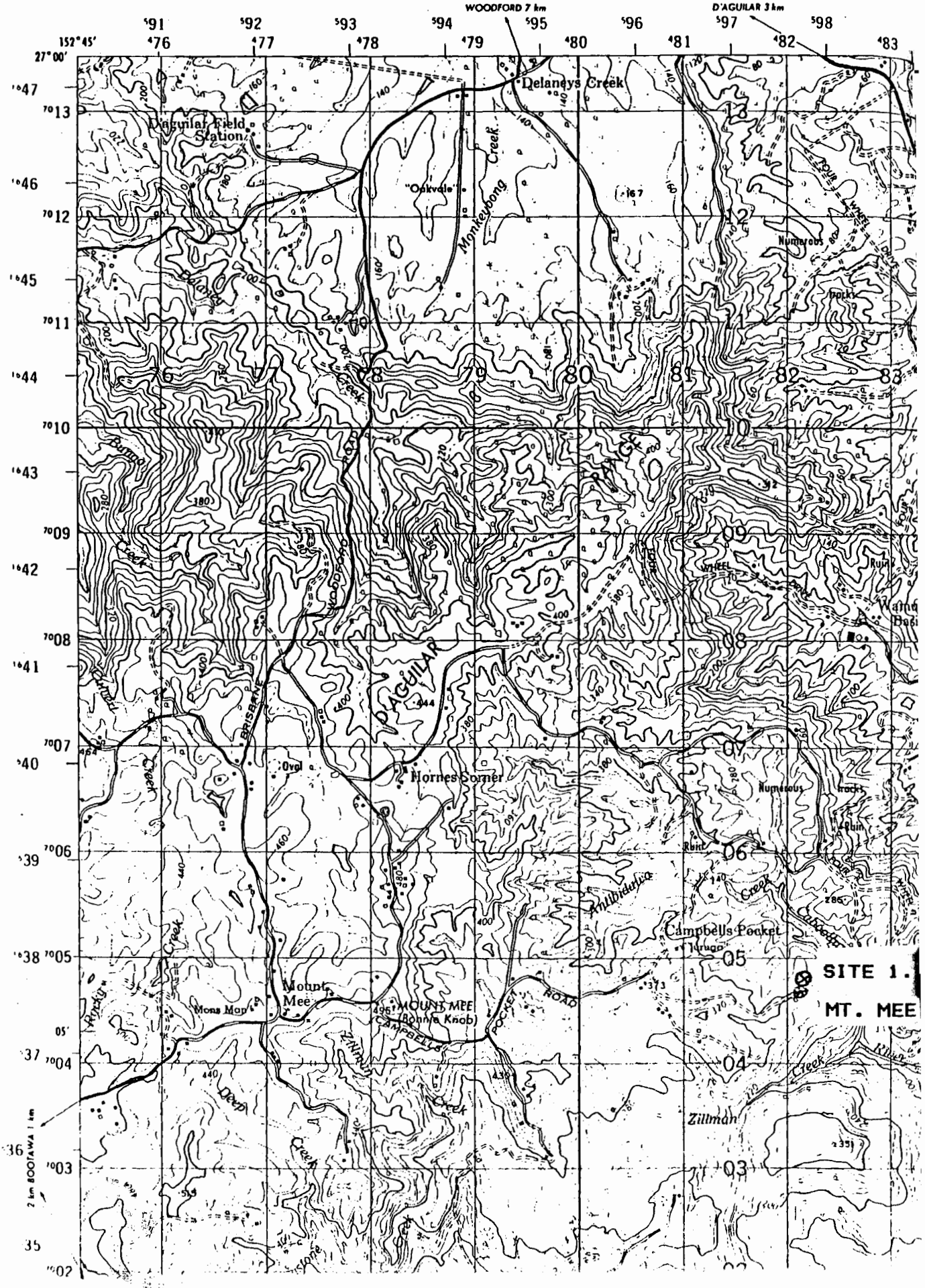

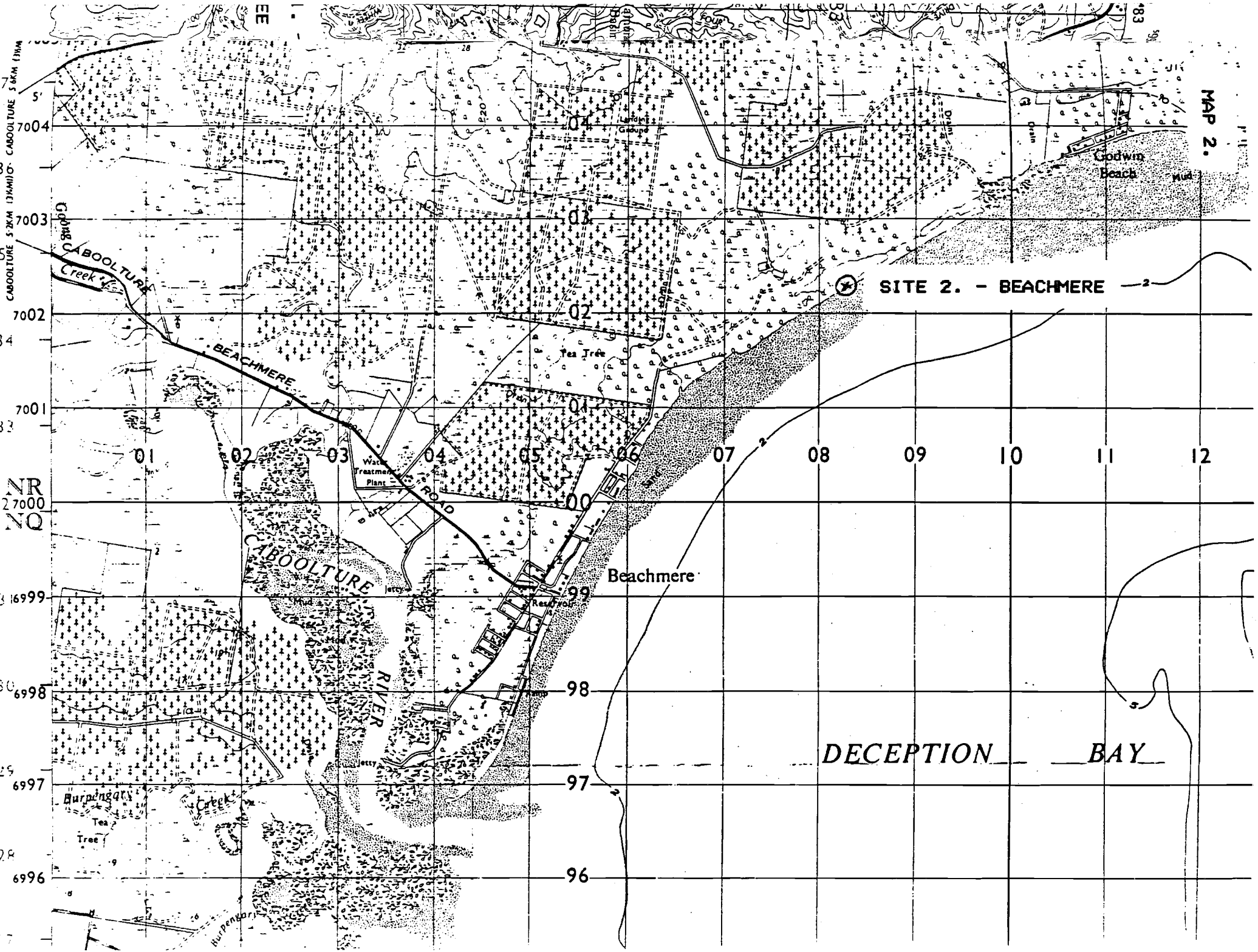
MAP 2.
SITE 2. - BEACHMERE
DECEPTION BAY
Beachmere
CABOOLTURE RIVER
BEACHMERE ROAD
Godwin Beach
Tea Tree
Water Treatment Plant
Reservoir
Jetty
Mud
Burpengary Creek
Tea Tree
CABOOLTURE 5·6KM (1KM)
CABOOLTURE 5·2KM (1KM)
Caboolture Creek
NR
NQ
7004
7003
7002
7001
7000
6999
6998
6997
6996
01
02
03
04
05
06
07
08
09
10
11
12
99
98
97
96

TABLE 5. HISTOGRAM ANALYSIS

Starting date: 1-JAN-85
Finishing date: 31-JAN-85

Site: BHMER

Wind Speed Ranges (m/s)

DAY	ANAREC#	H0	H1	H2	H3	H4	H5	H6	H7	H8	H9	H10	H12	H14	H16	H18	H20
1	0003	5	6	5	5	2	0	0	0	0	0	0	0	0	0	0	0
2	0003	4	5	6	6	3	0	0	0	0	0	0	0	0	0	0	0
3	0003	1	10	7	5	1	0	0	0	0	0	0	0	0	0	0	0
4	0003	0	1	1	0	4	6	3	2	2	1	4	0	0	0	0	0
5	0003	2	11	5	4	2	0	0	0	0	0	0	0	0	0	0	0
6	0003	4	9	0	1	6	2	0	0	0	1	1	0	0	0	0	0
7	0003	7	3	5	5	4	0	0	0	0	0	0	0	0	0	0	0
8	0003	2	6	5	8	2	0	1	0	0	0	0	0	0	0	0	0
9	0003	3	11	4	6	0	0	0	0	0	0	0	0	0	0	0	0
10	0003	10	5	5	4	0	0	0	0	0	0	0	0	0	0	0	0
11	0003	3	4	3	1	6	0	1	1	0	2	3	0	0	0	0	0
12	0003	0	0	0	0	0	0	6	4	11	3	0	0	0	0	0	0
13	0003	0	0	0	4	9	10	1	0	0	0	0	0	0	0	0	0
14	0003	0	0	0	8	11	5	0	0	0	0	0	0	0	0	0	0
15	0003	0	1	4	7	12	0	0	0	0	0	0	0	0	0	0	0
16	0003	1	6	3	3	11	0	0	0	0	0	0	0	0	0	0	0
17	0003	2	11	4	7	0	0	0	0	0	0	0	0	0	0	0	0
18	0003	4	8	1	4	1	1	0	0	0	2	2	1	0	0	0	0
19	0003	0	0	0	0	1	1	4	8	4	3	3	0	0	0	0	0
20	0003	0	2	6	9	7	0	0	0	0	0	0	0	0	0	0	0
21	0003	5	7	7	4	1	0	0	0	0	0	0	0	0	0	0	0
22	0003	4	5	4	6	4	1	0	0	0	0	0	0	0	0	0	0
23	0003	3	4	6	4	4	2	1	0	0	0	0	0	0	0	0	0
24	0003	3	9	6	5	1	0	0	0	0	0	0	0	0	0	0	0
25	0003	0	0	0	6	4	1	3	2	5	1	2	0	0	0	0	0
26	0003	0	0	1	1	8	7	5	2	0	0	0	0	0	0	0	0
27	0003	4	2	6	6	5	1	0	0	0	0	0	0	0	0	0	0
28	0003	9	6	2	7	0	0	0	0	0	0	0	0	0	0	0	0
29	0003	10	7	4	1	2	0	0	0	0	0	0	0	0	0	0	0
30	0003	10	4	4	6	0	0	0	0	0	0	0	0	0	0	0	0
31	0003	8	7	3	6	0	0	0	0	0	0	0	0	0	0	0	0
TOTAL:		104	150	107	139	111	37	25	19	22	13	15	1	0	0	0	0

TABLE 6. HISTOGRAM ANALYSIS

Starting date: 1-JAN-85
Finishing date: 31-JAN-85

Site: MTMEE

Wind Speed Ranges (m/s)

DAY	ANAREC#	H0	H1	H2	H3	H4	H5	H6	H7	H8	H9	H10	H12	H14	H16	H18	H20
1	0006	3	8	1	9	2	0	0	0	0	0	0	0	0	0	0	0
2	0006	3	5	9	7	0	0	0	0	0	0	0	0	0	0	0	0
3	0006	0	0	8	8	5	0	3	0	0	0	0	0	0	0	0	0
4	0006	0	3	2	4	12	3	0	0	0	0	0	0	0	0	0	0
5	0006	8	5	8	3	0	0	0	0	0	0	0	0	0	0	0	0
6	0006	4	5	4	8	2	0	1	0	0	0	0	0	0	0	0	0
7	0006	0	4	8	9	2	1	0	0	0	0	0	0	0	0	0	0
8	0006	2	5	8	6	2	1	0	0	0	0	0	0	0	0	0	0
9	0006	1	9	13	0	1	0	0	0	0	0	0	0	0	0	0	0
10	0006	0	3	6	4	6	3	2	0	0	0	0	0	0	0	0	0
11	0006	2	9	3	3	3	4	0	0	0	0	0	0	0	0	0	0
12	0006	0	0	3	6	15	0	0	0	0	0	0	0	0	0	0	0
13	0006	0	2	8	12	2	0	0	0	0	0	0	0	0	0	0	0
14	0006	0	3	8	11	2	0	0	0	0	0	0	0	0	0	0	0
15	0006	0	10	7	7	0	0	0	0	0	0	0	0	0	0	0	0
16	0006	0	10	4	10	0	0	0	0	0	0	0	0	0	0	0	0
17	0006	5	4	10	5	0	0	0	0	0	0	0	0	0	0	0	0
18	0006	2	6	7	2	5	1	1	0	0	0	0	0	0	0	0	0
19	0006	0	0	6	5	5	5	3	0	0	0	0	0	0	0	0	0
20	0006	0	9	14	1	0	0	0	0	0	0	0	0	0	0	0	0
21	0006	1	11	8	4	0	0	0	0	0	0	0	0	0	0	0	0
22	0006	1	3	13	6	1	0	0	0	0	0	0	0	0	0	0	0
23	0006	1	3	9	4	6	1	0	0	0	0	0	0	0	0	0	0
24	0006	2	14	4	4	0	0	0	0	0	0	0	0	0	0	0	0
25	0006	0	2	13	2	4	3	0	0	0	0	0	0	0	0	0	0
26	0006	1	3	13	7	0	0	0	0	0	0	0	0	0	0	0	0
27	0006	0	16	8	0	0	0	0	0	0	0	0	0	0	0	0	0
28	0000	2	17	3	2	0	0	0	0	0	0	0	0	0	0	0	0
29	0000	1	12	11	0	0	0	0	0	0	0	0	0	0	0	0	0
30	0000	5	8	7	4	0	0	0	0	0	0	0	0	0	0	0	0
31	0000	0	15	6	3	0	0	0	0	0	0	0	0	0	0	0	0
TOTAL:		44	204	232	156	75	22	10	0	0	0	0	0	0	0	0	0

TABLE 7. VIEW RECORDS

Starting date: 1-JAN-85
Finishing date: 31-JAN-85
Site: BHMER

Day Hour

DAY	ANRC#	1	2	3	4	5	6	7	8	9	10	11	12	13	14	15	16	17	18	19	20	21	22	23	24
1	0003	-1	1	0	0	0	0	0	1	1	1	1	2	4	4	3	3	3	3	3	2	2	2	2	1
2	0003	0	0	0	0	2	3	2	1	1	1	1	2	3	3	3	3	4	4	4	3	2	2	1	2
3	0003	2	2	2	1	1	1	1	0	1	1	4	3	2	2	3	3	3	3	2	1	1	1	1	2
4	0003	8	10	10	10	10	9	8	7	7	6	6	5	5	5	6	5	5	5	4	4	4	4	2	1
5	0003	1	1	1	0	1	0	1	2	2	1	1	1	4	3	3	3	4	3	2	2	2	1	1	1
6	0003	0	0	0	0	1	1	1	1	1	1	1	1	1	3	4	4	4	4	9	10	4	5	4	5
7	0003	2	1	1	0	0	0	0	0	0	0	1	2	2	3	4	4	4	3	3	3	2	4	3	2
8	0003	3	2	3	1	1	1	2	1	0	0	1	2	3	3	3	3	4	4	3	3	2	1	2	6
9	0003	3	2	1	1	0	0	1	2	1	0	1	1	1	1	1	3	3	3	3	3	2	2	1	1
10	0003	0	0	1	0	0	0	0	0	0	1	1	1	1	2	2	3	3	3	3	2	2	2	0	0
11	0003	0	4	4	2	1	1	1	1	0	0	2	2	3	4	4	4	4	6	7	9	10	10	10	9
12	0003	8	8	9	8	8	9	9	8	8	8	8	8	8	8	7	7	7	7	6	6	6	6	6	6
13	0003	5	5	4	5	5	6	5	5	5	5	5	5	4	4	4	4	4	4	3	4	4	3	3	3
14	0003	3	3	3	3	3	4	5	5	4	4	4	4	4	3	3	3	4	4	5	5	4	5	4	4
15	0003	4	4	3	4	3	3	1	2	4	3	3	3	4	4	4	4	4	4	3	2	2	4	4	2
16	0003	1	2	2	1	1	3	4	4	4	4	3	3	4	4	4	4	4	4	4	2	1	1	1	0
17	0003	1	1	1	1	1	1	1	0	0	1	2	2	3	3	3	3	3	3	3	2	2	1	1	1
18	0003	1	1	1	0	1	1	0	0	0	1	1	2	1	3	4	3	3	3	5	9	9	10	12	10
19	0003	10	9	10	10	8	6	7	6	6	7	9	8	8	9	8	7	7	7	7	7	7	6	5	4
20	0003	4	4	4	4	3	2	1	1	2	3	3	2	2	3	3	3	3	4	4	4	3	2	3	2
21	0003	1	0	0	1	0	0	0	1	1	2	2	2	1	1	1	3	3	4	3	3	2	2	2	2
22	0003	2	1	0	0	1	1	0	0	1	2	2	1	2	3	4	5	4	4	4	3	3	3	3	3
23	0003	3	2	2	1	0	1	0	1	2	3	3	3	2	1	2	4	5	5	4	4	4	6	0	2
24	0003	3	0	1	1	1	1	1	0	0	1	2	1	1	3	2	3	3	3	2	2	1	4	2	2
25	0003	3	4	4	3	3	4	3	3	3	4	5	6	7	8	6	6	7	9	10	10	8	8	8	8
26	0003	7	7	6	6	5	6	6	5	5	5	2	6	5	4	4	3	4	4	4	4	5	4	5	4
27	0003	5	2	2	4	1	3	4	4	3	4	4	3	3	3	3	2	2	2	2	1	0	0	0	0
28	0003	0	0	0	0	0	1	1	1	1	0	1	2	3	3	3	3	3	3	3	2	1	0	0	0
29	0003	0	0	0	0	1	0	1	0	0	1	1	1	2	3	4	4	2	2	2	1	0	0	1	0
30	0003	0	1	0	0	0	0	1	0	0	1	2	2	2	3	3	3	3	3	3	2	0	0	0	1
31	0003	0	0	0	1	1	0	0	0	0	0	1	1	2	3	3	2	3	3	3	3	2	1	1	1

TABLE 8. VIEW RECORDS

Starting date: 1-JAN-85
Finishing date: 31-JAN-85
Site: MTMEE

Day Hour

DAY	ANRC#	1	2	3	4	5	6	7	8	9	10	11	12	13	14	15	16	17	18	19	20	21	22	23	24
1	0006-1	1	1	1	1	0	1	0	1	1	3	3	4	4	3	3	3	3	3	1	0	2	3	3	
2	0006	3	3	2	2	1	2	0	0	0	1	1	1	1	2	2	2	2	3	3	2	2	3	3	3
3	0006	2	2	2	2	3	4	4	6	6	6	4	4	3	3	3	3	3	2	2	2	2	3	3	4
4	0006	4	3	4	4	5	5	4	4	5	4	4	4	4	4	4	4	3	3	3	2	2	1	1	1
5	0006	1	1	0	0	0	0	0	0	0	1	2	2	2	2	2	3	3	3	2	1	1	0	2	2
6	0006	1	2	0	1	1	1	0	0	0	1	2	3	3	3	3	2	3	4	6	3	3	3	4	2
7	0006	2	2	4	3	2	4	3	1	1	1	1	2	2	2	2	3	3	3	3	2	3	3	3	5
8	0006	5	4	1	0	0	1	2	2	1	1	1	2	2	2	2	3	3	3	3	3	3	2	4	2
9	0006	4	2	1	1	1	0	2	1	1	1	1	2	2	2	2	2	2	2	2	2	1	1	2	2
10	0006	2	1	2	1	3	5	5	6	6	5	4	4	3	4	4	4	4	3	3	2	2	1	2	2
11	0006	2	1	2	3	1	1	0	0	1	1	1	1	1	1	2	3	3	4	4	4	5	5	5	5
12	0006	3	2	4	4	4	4	4	4	4	4	3	4	4	4	4	4	4	4	3	3	2	3	3	2
13	0006	2	3	3	2	2	3	2	3	4	4	3	3	3	3	3	3	3	3	2	2	2	2	1	1
14	0006	1	1	1	2	2	2	2	3	3	3	3	3	3	3	4	4	3	3	3	3	2	2	2	2
15	0006	2	2	1	1	1	1	1	1	1	2	2	3	3	3	3	3	3	3	2	2	2	1	1	1
16	0006	1	1	1	1	1	1	1	1	2	3	2	3	3	3	3	3	3	3	3	3	2	2	1	1
17	0006	1	1	0	0	0	0	0	1	1	2	2	2	2	2	3	3	3	2	2	3	2	2	2	3
18	0006	2	2	1	0	0	1	2	1	2	2	1	2	1	1	2	4	3	4	5	6	3	4	4	4
19	0006	4	4	4	5	5	6	5	6	6	5	5	4	4	3	3	2	3	3	3	2	2	2	2	2
20	0006	2	2	2	2	2	1	1	1	1	1	1	1	1	2	2	2	2	3	2	2	2	2	2	1
21	0006	1	1	0	1	1	1	1	1	2	3	3	2	2	3	2	2	2	2	3	2	1	1	1	1
22	0006	1	3	2	2	2	2	2	1	0	1	2	3	2	3	3	2	3	4	2	2	2	3	2	2
23	0006	4	0	1	2	1	3	2	2	2	2	4	4	5	4	1	3	2	2	4	3	3	4	2	2
24	0006	1	1	1	1	1	0	1	1	1	0	2	2	2	3	1	1	1	1	2	3	3	3	1	1
25	0006	1	1	2	2	2	2	2	2	2	2	2	2	2	2	4	2	3	4	5	5	5	4	3	4
26	0006	3	3	3	3	2	3	2	2	2	2	2	2	1	0	2	3	2	2	2	3	2	1	2	1
27	0006	1	1	2	1	1	1	1	2	1	2	2	2	1	2	1	1	1	1	2	2	1	1	1	1
28	0000	1	1	1	1	1	1	0	0	1	1	1	1	1	1	1	3	3	2	2	2	1	1	1	1
29	0000	1	1	1	2	2	2	2	2	1	1	1	1	0	2	1	2	2	2	2	2	1	1	1	1
30	0000	1	0	0	1	0	0	0	1	2	2	1	2	2	3	2	3	3	3	2	2	1	1	1	1
31	0000	1	1	1	1	1	1	1	1	1	1	2	1	1	1	1	2	3	3	3	2	2	2	2	1

TABLE 11. HISTOGRAM ANALYSIS

Starting date: 1-JUL-85
Finishing date: 31-JUL-85

Site: BHMER

Wind Speed Ranges (m/s)

DAY	ANAREC#	H0	H1	H2	H3	H4	H5	H6	H7	H8	H9	H10	H12	H14	H16	H18	H20
182	M3001	0	5	3	3	8	3	2	0	0	0	0	0	0	0	0	0
183	M3001	0	1	0	0	4	5	9	5	0	0	0	0	0	0	0	0
184	M3001	0	0	3	9	5	5	2	0	0	0	0	0	0	0	0	0
185	M3001	1	3	3	7	10	0	0	0	0	0	0	0	0	0	0	0
186	M3001	0	1	4	4	10	4	0	1	0	0	0	0	0	0	0	0
187	M3001	4	11	8	1	0	0	0	0	0	0	0	0	0	0	0	0
188	M3001	2	4	6	6	4	2	0	0	0	0	0	0	0	0	0	0
189	M3001	1	1	1	1	8	1	1	5	0	3	2	0	0	0	0	0
190	M3001	0	12	5	4	3	0	0	0	0	0	0	0	0	0	0	0
191	M3001	0	10	7	7	0	0	0	0	0	0	0	0	0	0	0	0
192	M3001	4	18	2	0	0	0	0	0	0	0	0	0	0	0	0	0
193	M3001	1	17	6	0	0	0	0	0	0	0	0	0	0	0	0	0
194	M3001	5	11	3	5	0	0	0	0	0	0	0	0	0	0	0	0
195	M3001	3	17	4	0	0	0	0	0	0	0	0	0	0	0	0	0
196	M3001	5	11	7	1	0	0	0	0	0	0	0	0	0	0	0	0
197	M3001	2	8	11	3	0	0	0	0	0	0	0	0	0	0	0	0
198	M3001	2	11	8	3	0	0	0	0	0	0	0	0	0	0	0	0
199	M3001	4	8	8	4	0	0	0	0	0	0	0	0	0	0	0	0
200	2942	1	11	7	2	3	0	0	0	0	0	0	0	0	0	0	0
201	2942	2	13	8	1	0	0	0	0	0	0	0	0	0	0	0	0
202	2942	5	14	5	0	0	0	0	0	0	0	0	0	0	0	0	0
203	2942	8	7	9	0	0	0	0	0	0	0	0	0	0	0	0	0
204	2942	5	7	1	0	2	2	0	2	0	3	2	0	0	0	0	0
205	2942	0	0	0	0	4	11	5	3	1	0	0	0	0	0	0	0
206	2942	0	3	5	3	8	3	2	0	0	0	0	0	0	0	0	0
207	2942	0	6	16	2	0	0	0	0	0	0	0	0	0	0	0	0
208	2942	2	8	10	3	1	0	0	0	0	0	0	0	0	0	0	0
209	2942	2	17	5	0	0	0	0	0	0	0	0	0	0	0	0	0
210	2942	3	12	9	0	0	0	0	0	0	0	0	0	0	0	0	0
211	2942	1	9	7	2	4	1	0	0	0	0	0	0	0	0	0	0
212	2942	1	7	6	4	4	2	0	0	0	0	0	0	0	0	0	0
TOTAL:		**64**	263	177	75	78	39	21	16	1	6	4	0	0	0	0	0

TABLE 12. HISTOGRAM ANALYSIS

Starting date: 1-JUL-85
Finishing date: 31-JUL-85

Site: MTMEE

Wind Speed Ranges (m/s)

DAY	ANAREC#	H0	H1	H2	H3	H4	H5	H6	H7	H8	H9	H10	H12	H14	H16	H18	H20
182	M3032	0	0	3	12	7	2	0	0	0	0	0	0	0	0	0	0
183	M3032	0	0	0	7	12	5	0	0	0	0	0	0	0	0	0	0
184	M3032	0	0	2	12	8	2	0	0	0	0	0	0	0	0	0	0
185	M3032	0	1	13	10	0	0	0	0	0	0	0	0	0	0	0	0
186	M3032	0	1	15	8	0	0	0	0	0	0	0	0	0	0	0	0
187	3014	0	5	12	5	2	0	0	0	0	0	0	0	0	0	0	0
188	3014	3	13	5	3	0	0	0	0	0	0	0	0	0	0	0	0
189	3014	0	1	0	9	10	4	0	0	0	0	0	0	0	0	0	0
190	3014	0	1	2	2	2	10	6	1	0	0	0	0	0	0	0	0
191	3014	0	0	0	2	8	7	7	0	0	0	0	0	0	0	0	0
192	3014	1	8	6	2	2	5	0	0	0	0	0	0	0	0	0	0
193	3014	2	15	6	1	0	0	0	0	0	0	0	0	0	0	0	0
194	3014	0	1	4	9	9	0	1	0	0	0	0	0	0	0	0	0
195	3014	3	10	1	1	2	4	1	2	0	0	0	0	0	0	0	0
196	3014	0	5	8	6	4	1	0	0	0	0	0	0	0	0	0	0
197	3014	0	2	4	6	8	4	0	0	0	0	0	0	0	0	0	0
198	3014	0	2	6	3	2	6	3	1	1	0	0	0	0	0	0	0
199	3014	0	0	4	3	3	11	3	0	0	0	0	0	0	0	0	0
200	3014	0	4	9	5	4	2	0	0	0	0	0	0	0	0	0	0
201	3014	6	10	6	2	0	0	0	0	0	0	0	0	0	0	0	0
202	3014	3	6	9	5	1	0	0	0	0	0	0	0	0	0	0	0
203	3014	1	7	7	4	4	1	0	0	0	0	0	0	0	0	0	0
204	3014	1	6	5	10	2	0	0	0	0	0	0	0	0	0	0	0
205	3014	0	0	0	12	8	4	0	0	0	0	0	0	0	0	0	0
206	3014	5	3	3	11	2	0	0	0	0	0	0	0	0	0	0	0
207	3014	3	4	11	4	2	0	0	0	0	0	0	0	0	0	0	0
208	3014	0	7	10	3	4	0	0	0	0	0	0	0	0	0	0	0
209	3014	2	14	7	1	0	0	0	0	0	0	0	0	0	0	0	0
210	3014	1	5	6	5	4	1	1	1	0	0	0	0	0	0	0	0
211	3014	0	0	0	6	12	2	1	2	1	0	0	0	0	0	0	0
212	3014	0	0	0	1	11	8	3	1	0	0	0	0	0	0	0	0
TOTAL:		31	131	164	170	133	79	26	8	2	0	0	0	0	0	0	0

TABLE 13. VIEW RECORDS

Starting date: 1-JUL-85
Finishing date: 31-JUL-85
Site: BHMER

Day Hour

DAY	ANRC#	1	2	3	4	5	6	7	8	9	10	11	12	13	14	15	16	17	18	19	20	21	22	23
182	M3001	1	1	1	2	1	2	2	1	3	3	4	4	4	3	5	5	6	5	4	4	4	4	4
183	M3001	6	4	6	6	4	1	6	7	7	5	6	6	7	7	7	6	5	6	5	4	6	4	5
184	M3001	4	6	4	5	5	5	6	5	4	5	3	3	3	3	2	2	3	3	3	3	3	2	4
185	M3001	4	4	4	4	4	3	2	2	2	3	3	3	4	4	4	3	4	4	3	3	1	1	0
186	M3001	2	1	2	3	4	4	5	5	4	4	4	4	4	4	5	4	3	2	3	7	5	4	3
187	M3001	3	2	0	0	1	0	0	1	1	1	2	2	1	1	1	2	2	2	1	2	1	1	2
188	M3001	1	0	0	1	1	1	2	4	4	3	2	2	2	2	2	4	5	5	3	3	3	3	3
189	M3001	4	2	4	4	4	4	4	4	3	6	7	7	9	7	5	9	7	7	9	10	10	4	0
190	M3001	1	1	1	2	1	1	1	1	2	2	3	3	4	4	4	3	3	2	2	1	1	1	1
191	M3001	1	1	2	1	2	2	3	3	3	3	3	2	3	2	3	2	1	1	1	1	2	1	1
192	M3001	1	1	1	1	0	1	1	1	1	1	1	1	1	1	2	2	0	0	0	1	1	1	1
193	M3001	1	1	1	1	1	1	1	1	1	2	1	1	1	2	2	2	1	1	0	1	1	1	2
194	M3001	1	1	0	1	1	0	0	0	1	1	2	3	3	3	3	3	1	0	1	2	2	1	1
195	M3001	1	1	1	1	2	1	1	1	1	1	0	1	1	1	2	2	2	1	0	1	0	1	1
196	M3001	1	1	1	1	1	1	1	2	2	2	2	2	1	1	2	3	2	1	0	0	0	1	0
197	M3001	0	1	1	1	2	1	1	2	1	2	2	2	2	3	3	3	2	1	1	0	2	2	2
198	M3001	2	3	3	3	2	2	1	0	0	1	1	2	2	2	2	2	1	1	1	1	1	1	1
199	M3001	1	0	0	1	0	0	1	1	1	2	2	3	3	2	3	2	2	1	1	1	2	2	3
200	2942	2	2	2	2	2	1	1	1	2	3	4	4	4	3	2	1	1	0	1	1	1	1	1
201	2942	1	1	1	1	1	1	2	2	1	1	2	0	2	2	2	3	2	1	1	1	1	2	0
202	2942	1	1	1	1	0	1	1	1	0	0	1	1	2	2	1	2	2	2	1	1	0	1	1
203	2942	0	0	0	0	1	1	2	2	2	1	2	2	2	2	2	1	1	2	1	1	0	0	0
204	2942	0	1	0	1	1	1	1	0	0	0	1	1	2	4	5	5	7	10	9	9	10	9	7
205	2942	4	5	5	4	5	4	4	5	5	6	5	6	6	7	8	6	7	7	6	5	5	5	5
206	2942	4	5	6	6	4	4	5	5	4	4	4	4	2	3	4	3	2	3	2	1	1	1	2
207	2942	1	1	2	2	2	2	2	2	1	2	2	2	3	3	2	2	1	1	1	2	2	2	2
208	2942	2	2	1	1	1	0	1	1	2	3	3	2	2	2	2	2	2	0	1	4	3	2	1
209	2942	1	1	1	1	1	1	1	1	0	1	1	1	2	2	2	2	2	1	1	1	1	1	1
210	2942	1	2	1	1	2	1	0	0	0	2	1	1	1	2	2	2	2	1	1	1	1	2	1
211	2942	2	2	2	1	0	1	1	1	1	2	3	4	4	4	5	4	3	2	2	1	1	1	1
212	2942	1	0	1	1	2	2	3	2	3	3	4	4	4	5	5	4	3	2	2	1	1	1	1

TABLE 14. VIEW RECORDS

Starting date: 1-JUL-85
Finishing date: 31-JUL-85
Site: MTMEE

Day Hour

DAY	ANRC#	1	2	3	4	5	6	7	8	9	10	11	12	13	14	15	16	17	18	19	20	21	22	23	24
182	M3032	3	3	4	4	4	4	3	3	3	3	3	5	3	2	3	3	2	2	3	4	5	4	4	3
183	M3032	4	3	3	5	4	3	4	5	5	4	5	4	4	5	4	4	3	3	3	4	4	4	4	3
184	M3032	4	4	4	4	4	4	4	5	5	4	3	2	3	3	2	3	3	3	3	3	3	3	3	3
185	M3032	3	3	2	1	2	2	2	2	2	3	3	3	3	3	2	2	2	2	2	2	2	3	3	3
186	M3032	3	2	1	3	3	2	2	2	2	2	3	3	3	2	2	3	2	2	2	3	2	2	2	2
187	3014	1	2	2	2	1	1	2	2	2	2	3	4	4	3	3	3	3	2	1	2	2	2	1	2
188	3014	2	1	1	1	0	0	1	2	1	0	1	1	1	1	1	1	2	1	2	1	2	3	3	3
189	3014	3	3	4	4	3	3	3	3	3	4	5	4	4	5	4	4	5	4	4	5	4	3	3	1
190	3014	1	2	4	2	5	4	3	5	5	5	6	5	5	6	5	6	5	5	6	7	6	6	5	3
191	3014	3	4	4	5	5	5	5	6	6	6	6	6	5	4	4	3	4	4	5	5	6	6	4	4
192	3014	5	5	5	5	5	4	4	3	1	1	2	1	1	1	1	0	1	1	2	2	2	2	3	2
193	3014	2	1	1	3	2	2	2	2	1	1	1	1	1	1	1	1	1	0	0	1	1	1	1	2
194	3014	2	1	4	3	4	4	4	4	4	3	3	3	4	3	4	2	2	3	2	3	3	3	4	6
195	3014	6	7	7	5	5	5	5	4	3	1	1	1	1	1	1	1	0	1	1	0	0	1	2	4
196	3014	3	2	3	4	5	4	2	2	1	4	4	3	2	2	1	1	2	2	1	1	2	3	3	3
197	3014	3	1	2	2	4	5	5	5	4	5	3	4	4	4	4	4	4	1	3	3	2	3	2	3
198	3014	3	3	2	5	5	6	7	8	6	4	3	2	2	2	2	2	1	1	4	5	6	5	5	5
199	3014	6	5	6	6	5	5	5	5	5	4	4	4	3	3	2	2	2	2	3	5	5	5	5	5
200	3014	4	4	4	5	5	4	3	2	3	2	3	3	2	2	2	1	1	2	2	2	2	3	1	1
201	3014	1	1	2	2	3	3	2	2	1	1	2	1	1	1	1	1	2	1	0	0	0	0	0	0
202	3014	0	1	2	2	2	2	2	2	3	3	3	3	4	3	2	2	1	1	1	1	0	0	1	2
203	3014	1	2	3	2	3	3	4	4	5	4	4	2	3	2	1	2	1	1	1	0	1	1	2	2
204	3014	2	3	2	2	3	2	1	1	0	1	1	1	1	2	3	3	3	3	3	4	4	3	3	3
205	3014	3	3	3	3	3	3	4	4	4	4	5	5	5	4	5	4	3	3	4	4	3	3	3	3
206	3014	3	4	3	3	3	3	3	3	3	3	4	3	3	2	2	2	1	1	0	1	0	0	0	0
207	3014	0	0	0	1	2	2	4	3	2	1	2	4	3	3	2	2	1	2	2	2	2	2	3	1
208	3014	3	3	3	4	4	4	4	2	2	2	2	2	1	1	1	2	2	1	1	1	1	2	2	2
209	3014	2	3	2	2	1	2	2	2	1	2	1	1	1	1	1	1	1	1	0	0	1	1	1	1
210	3014	1	1	1	0	1	1	3	4	3	5	2	4	3	3	4	3	2	2	2	2	2	4	6	7
211	3014	7	8	7	6	4	4	4	4	5	4	4	5	4	4	4	3	4	3	3	3	3	3	4	4
212	3014	4	4	5	5	4	3	4	4	5	5	5	4	4	4	5	5	6	7	6	4	4	4	5	6

TABLE 15. - Wind Directions, Brisbane Airport
January, 1985.

Time (Hours)	Date	Direction	Speed (m/s)	Date	Direction	Speed (m/s)
0900	1/1	-	-	17/1	NW	0.5
1500		NE	4.1		NE	4.1
2400		Calm	-		Calm	-
0900	2/1	Calm	-	18/1	Calm	-
1500		NE	5.2		NE	5.2
2400		N	1.5		S	2.1
0900	3/1	N	1.0	19/1	SE	6.2
1500		SW	4.1		SE	6.2
2400		SE	6.2		Calm	-
0900	4/1	SE	5.2	20/1	S	1.5
1500		E	6.2		E	3.6
2400		Calm	-		Calm	-
0900	5/1	Calm	-	21/1	NW	2.6
1500		NE	5.2		NE	5.7
2400		Calm	-		Calm	-
0900	6/1	NW	1.5	22/1	NE	2.1
1500		N	7.7		NE	7.7
2400		Calm	-		N	2.1
0900	7/1	Calm	-	23/1	N	2.1
1500		N	5.2		N	7.2
2400		SW	3.1		Calm	-
0900	8/1	Calm	-	24/1	N	1.5
1500		N	7.2		N	3.1
2400		E	1.0		Calm	-
0900	9/1	Calm	-	25/1	S	3.1
1500		NE	4.1		SE	6.2
2400		Calm	-		SE	2.1
0900	10/1	Calm	-	26/1	S	1.0
1500		N	5.2		E	4.1
2400		S	3.1		Calm	-
0900	11/1	Calm	-	27/1	SE	2.6
1500		E	4.6		E	3.6
2400		SE	2.6		Calm	-
0900	12/1	SE	6.2	28/1	Calm	-
1500		E	8.2		NE	4.1
2400		S	1.0		Calm	-
0900	13/1	S	2.6	29/1	Calm	-
1500		NW	6.2		NE	3.1
2400		Calm	-		Calm	-
0900	14/1	SE	2.1	30/1	E	1.0
1500		E	4.1		N	3.1
2400		SE	1.0		N	1.0
0900	15/1	S	1.0	31/1	N	0.5
1500		NE	4.6		NE	4.1
2400		Calm	-		N	1.5
0900	16/1	SE	0.5			
1500		E	5.2			
2400		Calm	-			

TABLE 16. - Wind Directions, Brisbane Airport
July, 1985.

Time (Hours)	Date	Direction	Speed (m/s)	Date	Direction	Speed (m/s)
0900	1/7	-	-	17/7	SW	2.1
1500		S	4.6		W	2.1
2400		S	2.1		W	1.5
0900	2/7	SW	3.6	18/7	W	0.5
1500		SE	7.2		W	1.0
2400		S	1.0		W	2.1
0900	3/7	S	1.5	19/7	SW	4.6
1500		SE	5.2		S	0.5
2400		SW	2.1		Calm	-
0900	4/7	S	1.0	20/7	SW	2.6
1500		SE	2.1		Calm	-
2400		SW	2.1		Calm	-
0900	5/7	S	2.6	21/7	Calm	-
1500		SE	5.2		NE	1.5
2400		S	1.0		Calm	-
0900	6/7	S	1.0	22/7	S	1.5
1500		E	2.6		NE	1.0
2400		S	1.0		Calm	-
0900	7/7	Calm	-	23/7	SW	1.0
1500		S	1.0		E	5.7
2400		S	2.6		SW	1.0
0900	8/7	S	3.6	24/7	SW	4.6
1500		E	7.2		SE	9.3
2400		N	2.1		SW	3.6
0900	9/7	NW	1.0	25/7	SW	4.1
1500		NW	4.6		SE	0.5
2400		Calm	-		Calm	-
0900	10/7	W	5.2	26/7	Calm	-
1500		W	4.1		W	4.6
2400		SW	2.6		SW	1.5
0900	11/7	SW	3.1	27/7	SW	4.1
1500		Calm	-		E	3.6
2400		S	0.5		SW	1.0
0900	12/7	SW	2.1	28/7	S	2.1
1500		E	1.0		NE	2.6
2400		Calm	-		Calm	-
0900	13/7	SW	1.0	29/7	Calm	-
1500		W	4.1		N	3.6
2400		W	2.6		Calm	-
0900	14/7	Calm	-	30/7	W	3.6
1500		N	1.0		W	9.8
2400		Calm	-		W	7.7
0900	15/7	Calm	-	31/7	W	5.7
1500		W	0.5		W	6.2
2400		N	0.5		SW	4.6
0900	16/7	N	1.0			
1500		W	6.2			
2400		SW	1.5			

VII. BIBLIOGRAPHY

1. Double Island Point Wind-run Data, 1957 to 1974, Bureau of Meteorology, Australian Government Centre, Brisbane.

2. Barker, P.R., Bowden, G.J., Clegg, R.J., "A Wind Energy Report - The Winds of NSW", Energy Authority of NSW, Nov. 1984.

3. Wegley, H.L., Ramsdell, J.V., Orgill, M.M., Drake, R.L., "A Siting Handbook For Small Scale Wind Energy Conversion Systems", Windbooks, 1980.

THE SOLAHART "BLACK CHROME MIRACLE" SOLAR HOT WATER SYSTEM

Dr J Clark

Solarhart, Rockhampton

THE SOLAHART 'BLACK CHROME MIRACLE' SOLAR HOT WATER SYSTEM

by Jean Clark
Solahart Rockhampton

INTRODUCTION

Solahart is a division of S.W. Hart & Co. which was a small family business started by two plumbers in Perth in 1901. Their main activities were basic plumbing and sheet metal working. Solahart installed its first commercially manufactured solar hot water system in 1953 - 32 years ago! They are committed to the continual improvement of their product and have one of the largest research and development teams and one of the largest research budgets of any solar hot water manufacturer.

Solahart has won every major Australian product and design award and two international awards:

- Australian Design Award
- Hoover International Marketing Award
- Company of the Year Award
- Advance Australia Award
- Japanese Industrial Standards Accreditation
- B.H.P. Steel Award

and the solar products that it now manufactures includes:

- Solar hot water systems
- Solar domestic space (room) heaters
- Solar pool heating systems
- (solar water pumps)

Today I want to talk about solar hot water heating, leading up to the development of our heat exchange system, called the Solahart 'Black Chrome Miracle'.

SOLAR HOT WATER HEATING (Flat Plate Collector Systems)

Put a garden hose out in the sun in summer and you will get boiling hot water out of it - but only a small amount. But this is the principle of solar hot water heating. You need the equivalent of many lengths of garden hose, to collect the energy, and then you need a container to store the heated water. However, its not as easy as it sounds.

(a) THE STORAGE TANK

The first problem you have in the storage of the water; remember, you cannot control its temperature. A solar hot water storage tank will cycle between cold water temperatures of say 20°C up to a hot water temperature of say 70 to 85°C each day. This is an entirely different cyclic stress problem compared to a gas or electric storage cylinder which stays fairly constantly at a temperature of say 60°C. A further problem is that the conductivity of the water increases with increasing temperature so you also have the problem of increased electrolysis. From 1953 to 1963 Solahart used copper for its storage tanks and then changed to a copper alloy, cusilman bronze, in an effort to increase storage tank life. In 1976 Solahart changed its storage tank material again. It now uses a low carbon mild steel outer shell for its tank and then applies under vacuum two coats of vitreous enamel to the inner surface. There is an added bonus to this design. The storage tank is no longer a metal - a good conductor of electricity - but a complete electrical insulator, so we can now use an anode to give us total protection against electrolysis. With this system the failure rate is down to .01%.

(b) THE COLLECTOR PANELS

The collector panels on the 'conventional' solar hot water system have not basically changed in the 30 odd years that solahart have been manufacturing them. Their shape may have changed a little, they have increased in size but basically they are still ½ inch copper pipes held into position in an aluminium plate. Such panels give very little trouble in areas where the water is good and where frosts do not occur. So why was it necessary to move away from the 'conventional' solar hot water system?

THE PROBLEMS

Water is one of the most precious and yet most fickle natural resources we have. Its quality is highly variable, depending mainly on its source, and it has the temerity to freeze at $0^{o}C$ and boil at $100^{o}C$, both of which are easy to abtain.

In Australia there are very few major population centres that do not have either bad water or freezing conditions in winter. Both of these spell disaster to the collector panel. Poor water usually has a high total dissolved salt content and is 'hard'. The dissolved salt leads to electrolytic action between the copper and aluminium and the hardness shows up as a hard white calcide deposit on the insides of the riser tubes. The scale, in particular, is deposited from the hottest water at the top of the collector panels and builds up until it stops the flow of both water and heat completely. Its a very messy job to remove this scale build up. The fact that water freezes at $0^{o}C$ is very inconvenient as most

places in Australia (and the rest of the world) have frost conditions in winter. The water locked into the collector panels expands as it freezes causing the riser tubes to burst - and this can be quite dramatic.

These problems can be overcome by ad-hoc methods, such as water softeners and anti-frost devices but it means you have to know about the problem before it occurs. But really, all of these problems just scream - get rid of the water! And thats exactly what Solahart have done with their Black Chrome Miracle.

THE SOLAHART BLACK CHROME MIRACLE SOLAR HOT WATER SYSTEM

The storage tank that is used for the conventional solar hot water system is the best that is available with todays technology, so it forms the heart of the new system. However this tank is now completely surrounded by another tank or jacket and this outer tank is connected to the panels. The panels and the outer tank form a closed circuit, completely isolated from the storage tank, and they are now filled with oil, not water. Using an outer tank as the heat exchanger was a breakthrough. Steam pipes and coils running through the storage tank were trailed but they had insuffienct surface contact area to be effective, however even this maximisation of contact area did not give a totally acceptable performance, although the oil filled jacket had all the advantages that were being sought. The quality of the oil can be completely controlled - no calcides, no disolved salts and it doesn't start to crystallise till the temperature has dropped to -30°C. But

now the collector panels had to be redesigned, so that they became more efficient.

The new panels no longer contained water, so they could now be made from a material other than copper and the obvious choice, from both a cost and strength advantage, was steel. The new closed circuit panels are made totally from steel, with one side of each panel coming from one sheet of steel and with two sheets being spot and seam welded to form a complete panel. The steel panels are physically stronger than the 'conventional' panels but are also vastly more efficient because instead of the usual 6 riser tubes, the new panels have the equivalent of 37 riser tubes and utilise every bit of energy falling on the panel surface. To increase the efficiency further a selectively absorbing surface (Black Chrome) is electrolytically deposited on the front surface of the panel. This Black Chrome Miracle Solahart is about 20% more efficient than the conventional model.

It has however produced another problem connected with the fact that water boils at 100°C. The Black Chrome System is so efficient that under normal usage the system will boil the water in summer. This is not desirable from either the manufacturers point of view or the customer. The answer to this is to dump heat but not dump water, (water is a precious resource) and Solahart have done this using a heat dump valve and circuit. In essence a heat dump valve, fitted in the centre of the 'hard' end of the storage tank, opens

when the water at the centre of the tank is about 70°C. This water flows into an inch copper pipe which goes around the back of the system and is T'd into the cold inlet. In this way the hot water circulates in the exposed copper pipe losing its heat by radiation but returning the water to the cold inlet.

We, ofcourse, have a working model on display and there are millions of other features to our 'Black Chrome Miracle' (such as non-reflective toughened glass and all marine grade aluminium outer casing) but what we have done, <u>that is new to the 80's</u>, is that we have taken the water problems out of solar hot water.

SOLAR WATER HEATING - STATE OF THE ART

Mr D King

Solar Edwards, Rockhampton

SOLAR WATER HEATING - STATE OF THE ART

BY DON KING, SOLAR EDWARDS

OUR AIM TODAY IS TO BRIEFLY OUTLINE WHERE RESEARCH, DEVELOPMENT AND TECHNOLOGY HAS BROUGHT US IN RELATION TO EFFICIENT, ECONOMICAL AND RELIABLE SOLAR HEATING OF WATER FOR DOMESTIC, COMMERCIAL AND INDUSTRIAL USE.

IN TALKING ABOUT WHERE WE ARE TODAY IT WILL BE NECESSARY TO REFER TO THE PAST TO HIGH LIGHT THE ADVANCES THAT HAVE BEEN MADE.

THE MOST COMMON USE OF SOLAR HEATED WATER HAS BEEN IN THE DOMESTIC FIELD AND THE EARLIER SYSTEMS WERE MADE UP OF FLAT COLLECTORS PAINTED MATT BLACK WITH COPPER TUBES TO CARRY THE WATER, WHICH WAS STORED IN EITHER A LOW PRESSURE COPPER TANK OR MAINS PRESSURE GALVANISED OR CUSILMAN BRONZE TANK, GENERALLY ABOUT 200L CAPACITY. THESE SYSTEMS USED THE PRINCIPLE OF THERMOSYPHON FOR WATER CIRCULATION, AS DO THE CLOSE-COUPLED SYSTEMS OF TODAY. THE COST FACTORS INVOLVED WITH COPPER TANKS LED TO THE USE OF VITREOUS ENAMELLED MILD STEEL TANKS AND STORAGE CAPACITIES INCREASED TO AROUND 300 LITRES FOR NORMAL FAMILY USE, STILL USING THE FLAT BLACK COLLECTOR.

ALTHOUGH VITREOUS ENAMELLED TANKS ARE CALLED "GLASS LINED" THEY ARE NO MORE GLASS THAN YOUR BATH OR STOVE.

VITREOUS ENAMELLED TANKS WERE AN IMPROVEMENT OVER GLAVANISED TANKS BUT THEY ARE SUBJECT TO DEFECTS IN THE LINING SUCH AS PIN HOLES FLAWS ETC., AND AS THE LINING IS SOLUBLE IN HOT WATER THESE DEFECTS INCREASE IN TIME CAUSING ACCELERATED ACTION ON THE SACRIFICIAL ANODE WHICH MUST BE USED TO CONTROL ELECTROLYSIS. THE COMBINATION OF VITREOUS ENAMEL LINING AND SACRIFICIAL ANODES IS WHAT GIVES MILD STEEL TANKS AN EXTENDED LIFE. A "GLASS" LINED TANK WITHOUT ANODIC PROTECTION WOULD PROBABLY LAST ONLY 6 MONTHS.

ANOTHER AREA FOR CONCERN IS THAT DUE TO A CHEMICAL REACTION BETWEEN THE METALS IN "GLASS" LINED TANKS IN SOLAR SYSTEMS IT HAS BEEN FOUND THEY PRODUCE QUANTITIES OF HYDROGEN GAS UNDER STAGNATION CONDITIONS, SUCH AS WHEN AWAY ON HOLIDAYS ETC., AND EFFORTS ARE NOW BEING MADE TO DEVELOP VALVES TO ALLOW THE GAS TO BLEED OFF.

ANOTHER TANK MATERIAL USED WAS STAINLESS STEEL AND AS EDWARDS HAD USED IT FOR THEIR KEROSINE AND ELECTRIC SYSTEMS WITH EXCELLENT RESULTS THEY CHOSE TO USE 316 MARINE GRADE STAINLESS STEEL FOR THEIR SOLAR TANKS BECAUSE IT HAD ADVANTAGES NO OTHER MATERIAL OFFERED. IT DID NOT REQUIRE A LINING OR ANODE AND ELIMINATED ALL

THE PROBLEMS THEREOFF. IT WAS AMENABLE TO LOW COST AUTOMATED FABRICATION. IT HAD ALSO ACHIEVED A VERY HIGH ACCEPTANCE OVERSEAS IN EUROPE AND JAPAN AS A PREMIUM PRODUCT WITH EXCELLENT RECORDS OF RELIABILITY AGAINST CORROSION IN RELATIVELY HARD WATERS WITH A HIGH CHLORIDE CONTENT.

AN INDICATION OF THAT RELIABILITY IS THAT ONE GERMAN MANUFACTURER PRODUCED OVER 200,000 TANKS BETWEEN 1964 AND 1975 AND LESS THAN 0.1% HAD BEEN MADE UNSERVICEABLE BY CORROSION.

BECAUSE OF ITS HIGH STRENGTH TO WEIGHT RATIO, 316 STAINLESS ALLOWED EDWARDS TO PRODUCE LARGER SYSTEMS FOR SITUATIONS WHERE THE 300L COULD NOT MEET DEMAND. THESE SYSTEMS ARE THE 3 PANEL 440L AND THE 4 PANEL 600L. TANKS OF THIS SIZE IN VITREOUS LINED MILD STEEL WERE IMPRACTICAL FOR USE IN CLOSE COUPLED SYSTEMS BECAUSE OF THEIR WEIGHT, AS THEY ARE NORMALLY INSTALLED ON THE ROOF.

THESE SYSTEMS ARE ALL DIRECT HEAT CLOSE-COUPLED AND PROVIDED THE RIGHT SIZE SYSTEM IS INSTALLED, ANNUAL POWER SAVINGS OF 80% OR MORE ARE OBTAINED. BOOSTING IS ELECTRIC ELEMENT WITH THERMOSTAT CONTROL AND SAFETY CUT OUT. ELEMENT RATING CAN BE SELECTED TO SUIT RECOVERY NEEDS.

THE OTHER TYPE OF CLOSE-COUPLED SYSTEM MANUFACTURED BY EDWARDS IS THE CLOSED CIRCUIT HEAT EXCHANGER, WHERE THE SOLAR HEATED WATER IS STORED IN THE TANK AND COLD WATER IS HEATED AS IT PASSES THROUGH THE COPPER HEAT EXCHANGE COIL. THIS UNIT IS IDEAL FOR HARD WATER AREAS WHERE BLOCKING OF COLLECTOR TUBES COULD OCCUR. IT CAN ALSO BE CONNECTED TO SLOW COMBUSTION OR POT BELLY STOVES FOR BOOSTING AND PROVIDE MAINS PRESSURE HOT WATER.

LIKE ALL HEAT EXCHANGE SYSTEMS, EFFICIENCY IS NOT AS GOOD AS DIRECT HEAT SYSTEMS, BUT THE ADVANTAGES OF MAINS PRESSURE/SOLID FUEL BOOSTING AND PROTECTION FROM BLOCKING OF PIPES MORE THAN COMPENSATE.

EDWARDS ALSO MANUFACTURE A RANGE OF SPLIT SYSTEMS, WHERE THE COLLECTORS ARE ROOF MOUNTED WITH THE TANK AT FLOOR LEVEL. WATER IS CIRCULATED FROM PANELS TO TANK BY DIFFERENTIAL CONTROLLED PUMP. THESE SYSTEMS RANGE IN SIZE FROM 250 LITRE TO 500 LITRE AND ARE DESIGNED FOR DOMESTIC OR SMALL COMMERCIAL USE. BOOSTING CAN BE ELECTRIC, GAS OR SOLID FUEL.

IN ALL THESE SYSTEMS, EDWARDS NOW FEATURE THEIR EXCLUSIVE HIGH PERFORMANCE BLACK NICKEL COLLECTORS. THIS SELECTIVE SURFACE COATING LIFTS THE AVERAGE DAILY SOLAR INPUT FROM 2.15KW/HR TO 2.66 KW/HR FOR EACH M^2, AN INCREASE OF AROUND 25% IN ABSORPTION, WHICH RESULTS IN AN OVERALL INCREASE OF SYSTEM EFFICIENCY. BLACK NICKEL ON 0.8mm ALUMINIUM COLLECTOR PLATE HAS A HIGHER ABSORPTION AND LOWER EMITTANCE THAN BLACK CHROME OR "AMCRO" ON COPPER PRODUCTION PANELS.

THE LAST BUT NOT LEAST APPLICATION OF SOLAR WATER HEATING, WHERE BIG SAVINGS ARE BEING MADE IS IN THE LARGE COMMERCIAL AND INDUSTRIAL FIELD SUCH AS MOTELS, HOTELS, CARAVAN PARKS AND FACTORIES. BECAUSE OF THEIR EXPERTISE AND ABILITY TO DESIGN AND MANUFACTURE TO SPECIFIC CUSTOMER REQUIREMENTS, EDWARDS ARE RIGHT AT THE FRONT WHEN IT COMES TO THIS TYPE OF INSTALLATION - BE IT A SMALL MOTEL REQUIRING SAY 2000 LITRES OR A MULTI-STOREY BLOCK OF UNITS WHICH MAY REQUIRE 12,000 LITRES. THIS TYPE OF SYSTEM IS OF COURSE A SPLIT SYSTEM, WITH PANELS ON THE ROOF AND HEAT EXCHANGE TANK AT FLOOR LEVEL. THE NEUTRAL WATER IN THE PANELS AND TANK, IS PUMP CIRCULATED, STORING THE SOLAR HEATED WATER. LARGE CAPACITY HEAT EXCHANGE COILS ARE FITTED TO BOTTOM AND TOP OF TANK. THESE SYSTEMS ARE GENERALLY FITTED WITH CIRCULATING RING MAINS TO PROVIDE MORE EFFICIENT DELIVERY OF HOT WATER AND AVOID WASTAGE, NOT ONLY OF WATER, BUT OF HEAT ENERGY IN THAT WATER. BOOSTING OF THESE UNITS CAN BE GAS, OIL, ELECTRIC OR SOLID FUELS.

TO HIGHLIGHT THE ABILITY OF EDWARDS HOT WATER SYSTEMS, I WOULD BRIEFLY MENTION THREE OF THEIR MANY PROJECTS.

IN MAY, 1982 THE THEN LARGEST RETRO-FIT UNIT IN THE SOUTHERN HEMISPHERE WAS COMMISSIONED AT MOLINE HOUSE IN KARRINYUP, W.A. MOLINE HOUSE IS A SEVEN STOREY 158 UNIT RESIDENTIAL BLOCK WITH KITCHEN AND LAUNDRY FACILITIES. THE SYSTEM IS CAPABLE OF PRODUCING 11,360 LITRES OF 65°C HOT WATER PER DAY. THE STORAGE TANK IS 2.5M HIGH, 2.7M WIDE AND 4M LONG. BOOSTING IS OIL FIRED WITH A CAPACITY OF 493KW ON A HIGH FIRE MODE. STORAGE IS 11,365 LITRES CONNECTED TO 160M^2 OF COLLECTOR PANELS.

A SYSTEM OF SIMILAR TANK CAPACITY WITH 192M^2 OF COLLECTORS WAS INSTALLED AT THE BIRD OF PARADISE HOTEL, PAPUA NEW GUINEA. BECAUSE

OF COST OF IMPORTING FUEL, THIS SYSTEM WAS DESIGNED WITH A CHARCOAL BOOST TO BE MANUALLY STOKED.

THE THIRD AND LATEST, ALSO THE LARGEST, WAS THE RECENTLY COMPLETED INSTALLATION FOR CADBURY-SCHWEPPES IN PERTH. EDWARDS DESIGNED, MANUFACTURED AND INSTALLED A SYSTEM COMPRISING OF 600 BLACK NICKEL PANELS TOTALLING 1200M^2 AND STORAGE CAPACITY OF 68,000 LITRES. THE TANK HAS 4 HEAT EXCHANGE COILS AT DIFFERENT LEVELS TO PROVIDE HOT WATER AT VARYING TEMPERATURES FOR DIVERSE PRODUCTION NEEDS. THIS IS BELIEVED TO BE THE LARGEST SINGLE SOLAR HOT WATER SYSTEM IN THE WORLD.

I BELIEVE IT IS VERY EVIDENT THAT SOLAR HOT WATER IS HERE TO STAY, AND AUSTRALIAN MANUFACTURERS IN GENERAL ARE SHOWING THE WORLD HOW IT IS DONE, AND EDWARDS IN PARTICULAR WITH THEIR VERSATILITY TO DESIGN AND MANUFACTURE SYSTEMS FOR ALL REQUIREMENTS, TOGETHER WITH THEIR POLICY OF QUALITY, PERFORMANCE AND RELIABILITY SHOW THAT SOLAR EDWARDS HOT WATER SYSTEMS TRULY REPRESENT THE "STATE OF THE ART

Biggest solar system fitted in Perth

SOLAR Edwards has installed what it claims to be the biggest commercial solar hot water retro fit system in the southern hemisphere.

The unit will service 158 units, including a seven storey residential block, kitchen and laundry facilities, at Moline House in Karrinyup.

The hot water storage capacity of the unit is 11,365 litres. It can produce 11,300 litres per day heated to 65°C.

The storage vessel stands 2.5 metres high, is 2.7 metres wide and has a depth of 4 metres. The water is heated by 160m² of collector panels.

"There is a vast potential for equipment of this nature," Solar Edwards chief executive Mr Alan Edwards said.

"Western Australia can be proud not only that it leads Australia in research in this sphere but that it also is a world leader.

"Our ability to provide the technical knowledge and engineering skills to create large commercial systems has put us to the fore in an important and vital market area," said Mr Edwards.

The collectors are located in two banks, 40 metres wide, on the roof of the hostel fronting Jeanes Road.

The collectors have a power output of 586kW average per day.

The oil fired boost, if required, has on high fire mode a power output of 493kW.

Solar Edwards completed the project from order date to commissioning in just 6 weeks.

The boiler installation, from the close down of the old system to the start of the new system, was achieved in just one day.

The new solar hot water service is designed to reduce water heating costs by 65 per cent.

"The Anglican Homes are looking to the solar system to help the association cope with ever increasing costs," said Mr Ross Bradshaw, executive director of the Anglican Homes.

"We are pleased that in installing the Solar Edwards system at Moline House, we have been able to support a totally Western Australian designed and installed system."

The previous largest retro fit unit (i.e. replaces previous unit) with a capacity of 9,500 litres, had been installed by Solar Edwards at the Northam district hospital.

Solar Edwards, a totally Western Australian company, is said to be the largest commercial solar manufacturer in Australia.

Solar Edwards is a major exporter of solar units to the United States, Europe, south east Asia, the Pacific islands and Mauritius.

The collectors on the roof of Moline House. Inset: the new 11,365 litre unit.

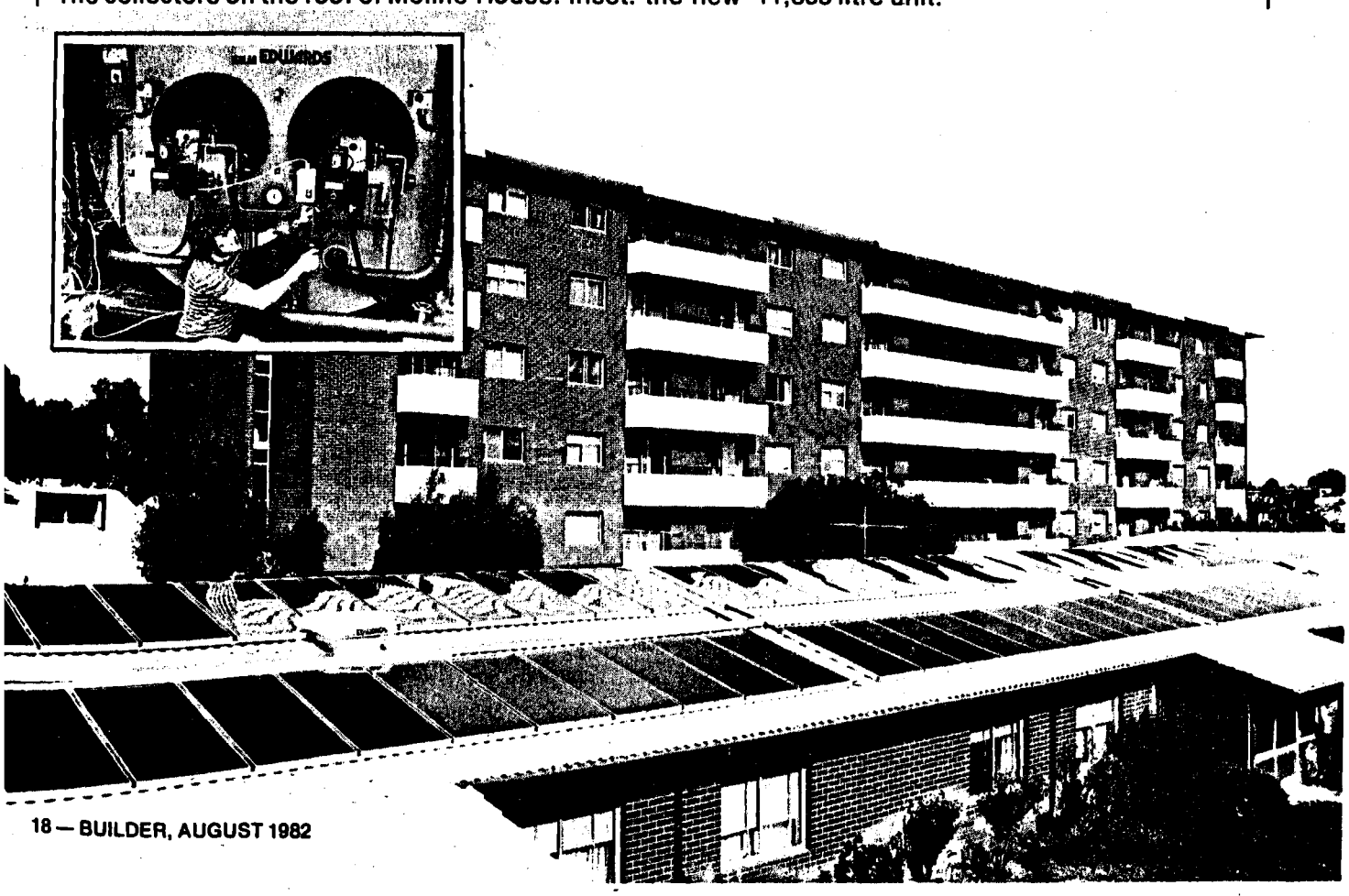

SCHWEPPES SOLAR HOT-WATER SYSTEM

BY LIZ BYRSKI

A firm commitment to reduce industrial pollution combined with the rising price of oil, were the factors which led to the installation of the largest industrial solar hot water system in the southern hemisphere, in Schweppes Drinks Division, Osborne Park plant.

It is the first time that a solar hot-water system has been used for one of the company's soft drinks' plants and the system could well be the prototype for similar systems in other Schweppes bottling plants.

"The project was first considered about two years ago," explains Schweppes' State Industrial Engineering Manager, Ron Caithness. "We had an oil-fired boiler which had served us well for a number of years, but with the rising price of oil, we had to take a serious look at our water-heating system. The solar suggestion really came from employees who had domestic hot-water systems in their own homes. After that we came up with a concept and then we had to find the people with the right skills to produce what was going to be the largest and most complex system in the southern hemisphere, possibly in the world."

As Ron Caithness points out, with the solar hot-water industry in Australia centred in Perth, the number one spot for sunshine, the Schweppes plant was the ideal situation for a project of these dimensions.

The new solar system is manufactured by Edwards Hot Water Systems and uses 600 flat plate collectors covering a roof area of 1200 square metres.

"We were particularly fortunate with our existing building," Ron Caithness explains. "The building is about 30 years old, and not only faces north-east, but has a saw tooth roof which was ideal for fitting the panels. It meant that only minor structural modifications were required."

With the sun following an east-west path a north-easterly aspect ensures the maximum exposure to sunlight and shade patterns on the existing roof worked extremely well. To maximise the efficiency of the system the panels are treated with a high-performance black nickel surface which will capture more energy from the sun than normal panels.

The system stores 85,000 litres of water in insulated steel tanks which measure 6.2m high. These store the water at a constant 80°C.

The soft drinks manufacturing industry is particularly active during the summer months and the recent hot spell certainly tested the new system to extremes while still in its commissioning period. A major factor in the consideration of installing the system was whether it could provide water temperatures required in a drinks bottling and canning plant.

Millions of bottles per year pass through the Schweppes Osborne Park plant. All are washed before use

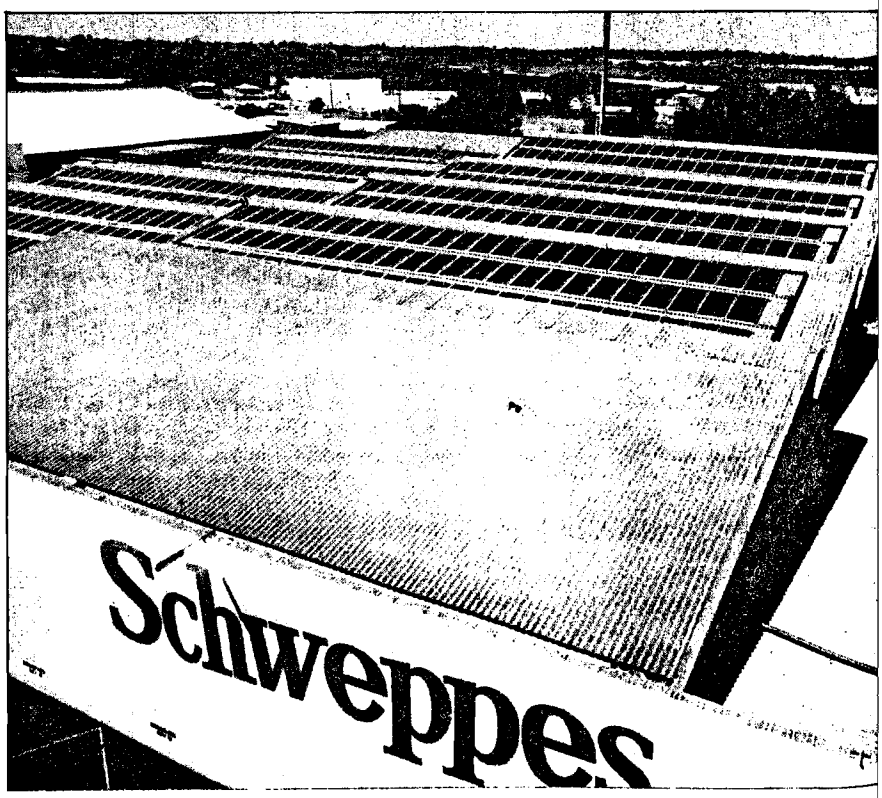

SOLAR POOL HEATING

Mr D Kersey

Zane Solar Energy System, Brisbane

Symposium and Exhibition of Existing Technology for Renewable Energy Sources
Held at The Capricornia Institute, Rockhampton 26th and 27th September, 1985

---oOo---

SOLAR POOL HEATING

DOUG KERSEY, COMMERCIAL MANAGER, ZANE SOLAR SYSTEMS AUSTRALIA P/L

AIM

The aim of this paper is not to present a lengthy technical lecture - but to try and illustrate to the technically minded and the layman alike that solar is now.
That, I believe, is the theme of this symposium and I could not agree more.

INTRODUCTION

At Zane, we have endured almost 10 years of customers saying "we'll wait until it gets better; or cheaper; or easier, - or any other reason not to use solar" because of either ignorance or fear of something they do not understand.

It is strange when we work in the sun and know it burns our skin, we play in the sun and it gets hot, or climb into our very efficient glazed solar collector - our car - and find it is unbearably hot and yet still cannot understand that the sun can efficiently and cheaply heat water.

At Zane, we know solar is now - in fact, it was now, yesterday, but has taken quite a while to educate the consumer.
Like anything so-called "new" it needed success stories to make people believe.
We believe we are one of those success stories, although for the first seven years of our ten year existance it was a real struggle.
However, the last three years have been excellent with a doubling of turnover each year.
Other solar companies have experienced the same growth which really goes to prove solar is now!

SUCCESS STORIES

Believe it or not, Victoria is the leading light in the fostering of the solar industry at State Government Level.
The Government formed the Victorian Solar Energy Council (called V.S.E.C.) to investigate the feasibility of solar in the community.

After several years of study, this semi-government body recommended that funds be granted to subsidize Local Government and Institutional pool owners for investment in solar.

This recommendation was accepted and subsidies of up to 25% of the capital cost of the solar system are now available.

So far some 12 or so major pools have changed to a solar or solar/fuel mix for heating purposes and V.S.E.C. plan to subsidize a further 70 systems between 1985 and 1990 - a very forward looking scheme and an acceptance in Victoria, that solar is now!

...../2

N.S.W. offers no such subsidy and, as a Queenslander, I am ashamed to say neither does the Sunshine State.
Both states make token gestures with solar information centres.
The N.S.W. solar energy centre at The Rocks in Sydney is well worth a visit, but the centre at the Queensland University is very haphazard and lacklustre.

However, enough negatives, let's talk about success.

We have had the Honour recently to install what we believe to be the two biggest unglazed solar pool heating systems in the Southern Hemisphere.
The 630m² absorber system (on 1 000m² roof) at Oak Park in Victoria, now heats an outdoor Olympic pool, Learners pool and Toddlers pool complex that was before, heated by Natural gas alone.

The solar system was completed in February this year and during early March - remember in Melbourne - the solar system maintained the pool at 29°C for 4 consecutive days whilst the Boiler was on repair - an excellent achievement that also proves - solar is now.

The largest unglazed system was recently commissioned (in the last week of August) at the Tea Tree Gully Waterworld complex at Ridgehaven - a suburb of Adelaide.
At 741m² of absorber on a 1 100m² roof, the system appears to be as big as a football field - in fact over 14 klm of absorber was laid.
Results have yet to be monitored.
The National Sports Institute in Canberra is another example of NOW SOLAR.
One a little closer to home is the Mackay Memorial Pool - 480m² of absorber on 790m² of roof - (in fact four separate roofs each with its own system).
This system completed in early August has increased attendance 50% over last year and is holding the pool at around an average 26°C, some 5°C warmer than the same time last year.

Mackay has found out that solar is now.

DOMESTIC POOL HEATING

Now, what about the so-called man in the street.
The Man who has a 9 X 4m pool in the backyard and who cannot use it for around:

- 8 months per year in Melbourne
- 6 months per year in Sydney
- 3 months per year in South East Queensland
- 2 months per year in Central Queensland
- and - 2 months per year in North Queensland

In Melbourne and Sydney owning a pool is like parking your $20,000 Jaguar Motor car in the garage for 6 months or more and not using it.

For the sake of a relatively minor sum of money (when compared to the cost of the pool) usually around 10% - 15% of that cost, they can double their pool usage - it makes sense to heat with the sun, and it's mostly free.

In central and Northern Queensland because the pool water is often too hot, the solar system can be used to cool the pool, by pumping the water over the roof at night, for that refreshing cool swim in the morning - a very different use of a solar system.

...../3

FILTRATION & HYDRAULICS

The domestic pool heating system usually presents no hydraulic problems and most good makes of filtration units can cope with the extra load imposed by the solar system (usually around 30 kPa).
Some cheap filtration units cannot stand the extra load and you will usually find those manufacturers will not honour their warranty if a solar system is connected - they do not realize that solar is now, they have not kept up with consumer demands and they are being left behind.

Choose your filtration equipment carefully - if in doubt ask your local Zane Dealer - he knows which unit works with a solar system and which doesn't.
A pump and filter that is under-powered will not allow a solar system to work properly, so it is in the solar dealer's interest to ensure the right equipment is installed.
He is also unbiased as he generally does not sell the filtration unit and therefore there is no monetary gain by steering you to a certain brand.
His intent is to make sure his solar system works - if it doesn't - he doesn't get paid.

Should the already installed equipment be under-powered it may be necessary to install a boost pump in order to ensure the pool water flows to the roof.
This is usually the penalty paid for buying cheaper equipment in the first place - it is always false economy.
A boost pump will be invariably required where the absorber has to be placed on a second storey roof (or higher) or where excessive pipe runs are necessary to get the water to the roof.

You may ask - who do I go to see so that I do not purchase the wrong equipement?
We suggest that you take these simple steps -

- Do not treat your pool builder as a god who knows all - he is usually a pool expert but not a solar expert.

- Do find out from your pool builder what his filtration requirements are and what equipment he is recommending.

- Take that specified equipment detail to your Zane Dealer and ask if it is compatible or should it be more or less powerful - remember now is the time to get it right.

- If you cannot decide - both the filter company and solar company have a head office, with engineers and experts who are only to happy to assist.

- Make sure your solar man is thoroughly trained in the hydraulics of the system as bad hydraulic design invariably means an inefficient solar system, check with his head office if in doubt.

Solar systems just do not fail to work, they cannot, they are just too simple.
Failure is always caused by external faults - usually poor hydraulic design.

In closing I must mention that the same solar pool heating system I have been talking about has been cleverly utilized in commercial situations, such as Caravan Parks amenities and ablutions, to pre-heat water before it enters the boiler and at an extremely low cost per litre of water.

Paybacks on systems like these are usually around two years - a unique and worthwhile investment.

...../4

Finally I must dispel the myth that solar can heat a pool all year round - no matter how efficient a system is, even at 100% collection efficiency, it is physically impossible to do.

Even sunny South-East Queensland only has an average of around 300 solar days a year - how can solar work on the other non-solar days? So if a salesman says his system will have steam rising off your pool at midnight for 365 days a year - view it with a lot of skepticism and suspicion.

Then call in a reputable company - it may cost alittle more but you will know that it will work so long as you take the expert's advice.

Remember our theme today -

SOLAR IS NOW!!!

What I have said today is a very brief resume of solar pool heating.
There are many other factors affecting solar system performance but time does not permit elaboration.
I would be only too pleased to assist anyone should they have any questions.

SOLAR-HEATED ROTARY-RECIPROCATING CYCLIC PRESSURE GENERATOR, AND ITS APPLICATIONS IN WATER PUMPING AND REFRIGERATION

Mr J H V Stephens

Retired Engineer

SympExhib/38/6

SOLAR HEATED ROTARY AND RECIPROCATING CYCLIC PRESSURE GENERATORS, AND APPLICATIONS IN WATER PUMPING AND REFRIGERATION

J H V Stephens

INTRODUCTION

This paper presents a preliminary account of devices and systems under development in the course of the author's on-going private project, carried out with the cooperation of The James Goldston School of Engineering at the Capricornia Institute.

The purpose of the work is the development of low-cost vapour operated systems using solar heating to pump water and provide domestic refrigeration.

Where solar water heating is already employed, the electrical power requirements of isolated homesteads may with advantage be reduced if these functions can be performed by simple heat engines of low cost, even though their thermal efficiency is relatively poor. In this context it is felt that thermal efficiency alone is not a good measure of the effectiveness of solar powered systems, which should rather be judged on the basis of desired effect produced per unit capital cost.

1 WATER PUMPING

1.1 Pumps

Cyclic pressure variations of suitable amplitude and frequency may be used to pump water, either applied directly or through an intermediate coupling fluid, usually air. In the latter case, the gas-coupled pumpmay be remote from and at a different level to the source of pressure variation.

A very simple pumping system is shown in Figure 1A. Steam from a solar boiler enters the tank through Valve "A" forcing water to delivery. When water in the small boiler is completely vapourised, the process stops and condensation draws fresh water from the suction line. Some of this is drawn into the boiler, which is momentarily cooled, then the process repeats. The system has some disadvantages in that air, previously dissolved, builds up in the tank, and the boiler itself is subject to severe thermal stress, and must be sized to suit the tank volume, head pumped and suction lift. Air build-up will eventually stop the cycle, unless means are provided to purge it at each stroke. Valves A and B must withstand steam temperatures.

A typical gas-coupled pump of simple construction is shown in Figure 1B. It is constructed of PVC stormwater pipe with simple rubber-flap inlet valves and a delivery valve which is a flexible sleeve over a perforated metal or plastic tube. The lower chamber acts as an accumulator, and is intended to avoid the loss of energy involved in accelerating the liquid column in the delivery pipe from rest at the start of each pump stroke. The pump shown is one intended to be lowered easily down a standard five inch bore casing and with the dimensions shown, pumps up to 2 litres per stroke. When thedelivery pipe can conveniently bebrought up outside the pump casing, a hollow rubber float may be used to blockairand outlet pipes at each end of the stroke.

1.2 Isolators

Since contact with pump walls and water surface would result in excessive condensation of thevapourof the working fluid, an isolating device is required. This may conveniently be a flexible and elastic membrane in a suitable enclosure, as shown in Figure 2. The arrangement is such that any condensate drains back to the vapour source during exhaust or relaxation portion of the cycle. Choice of membrane material is dependent on the working fluid.

TA type silicone rubbers are usable in steam systems up to about 140°C, corresponding to a saturation pressure of 2.5 atmospheres (gauge). Polysulfides are better suited to resist some volatile fluids, but are limited to temperatures below 80°C, which in the case of acetone, corresponds to a saturation pressure of just over 1 atmosphere (gauge).

Metal bellows are an alternative at higher temperatures but are relatively expensive. At 50KPa gauge and 70°C, a very simple isolator consisting of a synthetic rubber toy balloon in a two litre wine flagon has been used successfully over limited periods, with acetone as the working fluid.

Isolator diaphragm material, rather than the temperatures and pressures available from solar boilers, appears to impose a limit on the head of water which can be pumped with air-coupled systems at present and some difficulties have been experienced in obtaining supplies of suitable elastoner sheet.

1.3 Cyclic Pressure Sources

These may be broadly divided into two main categories:-

1. Devices of the nature of automatic valves or expansion engines. These, in addition to the solar boiler, require the auxiliary devices of the conventional Rankine cycle; a condenser and feed pump to return condensate to the boiler if the cycle is to be a closed one.

2. Machines which alternately evaporate and condense a working fluid, with pressure vessels which act as both boiler and condenser. These are inefficient, but extremely simple and cheap in construction, requiring no auxiliary devices, except isolators where gas-coupled pumps are to be driven.

1.4 Devices

A recently developed device belonging to category 1 above is shown in Figure 3. Here, a mechanical coupling is used to drive the isolator diaphragm, the coupling acting also as the control valve and the diaphragm as the piston of a simple expansion engine. At the bottom of the stroke, a port in the sleeve aligns with the inlet port of the outer cylinder, allowing vapour to pass through the sleeve and the ports at its upper end to the face of the diaphragm, which moves upward. The sleeve closes the inlet port, and as expansion continues reaches the top of the stroke, when its lower end clears the exhaust port. At this point, a second row of ports at the top of the sleeve are so arranged that any condensate in the diaphragm enclosure is drawn back to exhaust as the return stroke commences.

At the lower end of the machine, the cylinder end plug carries an extension with a small clearance inside the sleeve, extending upwards to the level of the exhaust port. This reduces the volume available for condensate to collect at the bottom of the cylinder, while condensate in the space between this extension and the cylinder wall acts as a hydraulic damper for the sleeve at the bottom of the stroke.

The spring above the diaphragm ensures that the sleeve returns to the bottom of the stroke where theinlet port is open, in the absence of vapour pressure.

Figure 4 shows a simple vapour oper ated feed pump intended for use withthe above and other category1 machines. The vapour operated spool re-compresses the spring when the end of the pumping stroke is reached. Feed pressure may be varied over a limited range by the spring adjustment.

A vapourising/condensing machine of category 2 is shown in Figure 5. In this instance, the machine is a direct-pumping type, and the pumped water is used as the working fluid. it is mounted on a pivoted frame not shown in the diagram and constrained to rotate through a predetermined angle only, in this case 60°.

The boiler-condenser consists of a 12 mm copper tube concentric within a 20mm one, the annular space between the tubes being the boiler. The inner tube extends outside the outer and is formed as a loop in a plane normal to the axis of the boiler and at 120° to the line between boiler and pivot. This loop is partly filled with water.

When the frame rotates, each boiler alternately occupies the lower, heating, position which is arranged along the focal line of a parabolic trough reflector. In this position, the cooling water in the inner tube is wholly in the external section of the tube, allowing boiler temperature to rise. Vapour pressure forces waterin the associated pump chamber to the delivery line through a valve. Meanwhile, the other "boiler" is in the upper, condensing, position, when cooling water in its inner tube occupies the section inside the boiler, providing rapid condensation and drawing water from the suction line into the chamber and "boiler".

The geometry of the system is so arranged that rotation only takes place when the "condensing" pump chamber is nearly full, and the pressurised chamber nearly empty. The cycle time of this machine is fairly long, of the order of five minutes, since some, initially cold, water is heated and vapourised at each half cycle; for the same reason, thermal efficiency is low. Other losses are due to condensation of vapour in the pump chamber, though insulating floats alleviate the effect at the water surface.

The machine is, however, simple and cheap and uses no precision machined parts. The trough reflector is constructed of 22 gauge galvanised sheets 1.8 x 1.2 metres, two being used per metre run of boiler. These are faced with mirror-backed acrylic sheet and arranged with 1.2m ends butted at the centreline, the outer ends being forced upward in a natural curve to the required position and secured in a light wooden frame, giving a total arc length of 3.6 m and aperture of 2.6m across the mouth. The reflector is pivoted about the focal line, with the pivot at a height of 1.6 m above the base, so that the reflector may be inverted to act as a cover for the machine at night or in inclement weather. The reflector axis is arranged in an E/W direction and its orientation adjusted as necessary every few days. The boilers are enclosed in glass tubes of 30 mm internal diameter to reduce convection losses.

Machines of this general type can also use other working fluids with lower saturation temperatures at the pressures required. In these cases, the pump chambers of the direct-pumping machine become small balance chambers, and the liquid of the working fluid is transfered between them through a needle valve which provides a variable restriction, and controls thecycle time. Isolators are then used to drive air-coupled pumps.

An attempt is presently being made to build a machine of this type using flat-plate collectors, with acetone as the working fluid, in order to investigate ways of minimising condensation on container and liquid surfaces and to evaluate isolator diaphragm materials under working conditions. This machine is shown in Figure 6, and will be used both with and without an inclinable parabolic arc concentrator of low concentration ratio.

2. REFRIGERATION

2.1 Pulse-tube heat transfer

While absorption systems are feasible using indirect solar heating, a gas-cycle refrigeration system of comparable coefficient of performance, which has previously been used in cryogenic work, is thought to be a possible alternative if a suitable pressure waveform can be produced by simple means.

The pulse-tube device uses thin-wall vertical tubes of a material with low thermal conductivity, having a large ratio of length to diameter, and closed at the upper end.

Pressure of a gas (air) at the lower end is now varied in a cycle such that a fast rise and a fast fall of pressure are separated by periods when pressure remains sensibly constant.

Any small slug of gas within such a system moves toward the closed end and is compressed adiabatically as pressure rises, with consequent increase of temperature. During the high pressure dwell period, heat is transferred to the tube wall and the temperature of the gas decreases. During the next adiabatic expansion, the slug travels back almost to its original position, when its temperature is then below that of the tube wall at that point. Heat transfers to the gas from the tube wall during the low-pressure dwell period, returning its temperature to the original level. The cycle then repeats.

The effect of an infinite number of such infinitely small slugs of gas, performing this Brayton cycle is to "pump" heat from the lower to the upper end of the tube. An efficient regenerator is necessary to ensure that gas at the cold lower end of the system does not gain heat from unwanted portions of its surroundings as it moves in and out between pulse-tube and regenerator.

Figure 7 shows a simple single-stage pulse tube system, where the regenerator is an annular space around the insulated wall of the pulse-tube enclosure. heat is pumped from an aluminium "cold plate" within the refrigerated enclosure to a finned heatsink at the top of the pulse-tube.

2.2 Square-wave Pressure Generator

Devices previously described produce slow or sinusoidal pressure variations which would not cause the rise and fall of pressure to occur quickly enough for the process toapproximate to an adiabatic one. A simple free-piston device has been devised which can produce the required square-wave, and this is shown in Figure 8.

Outlets marked "A" & "B" connect to isolators, and in the absence of vapour pressure at inlet the piston spool is returned by the spring to the position shown. Vapour pressure at inlet is now connected to isolator "A" and when pressure in this isolator rises, to the right-hand piston face via control screw "A_1". The piston now moves at a rate controlled by the setting of A_1 closing the inlet port. Vapour in the isolator continues to expand through A_1, moving the piston until the isolator is connected to exhaust port E, when a rapid fall in isolator pressure occurs. At this point the inlet port is also opened to isolator "B" and the action repeats in reverse. Provided that the connections are arranged so that fluid friction is low, the resulting pressure cycle in each isolator has a rapid rise and fall with intervening dwell periods when little change occurs, the cycles being 180° out of phase. The two isolators can drive separate paralleled or staged pulse tubes, alternatively, one can be used for water pumping, as shown in Figure 9.

3. ENERGY STORAGE

3.1 Hot Water Storage

While it may be convenient to pump water for six to eight hours about solar noon, refrigeration systems will normally require to work on a 24 hour basis and continue to do so during periods of at least 2 or 3 days with only diffuse insolation. The necessary energy storage can be achieved by the use of a working fluid with low saturation temperature, deriving heat supply from an insulated tank of heated water.

3.2 Working fluids

Suitable working fluids for category 1 machines will have saturation temperatures well below 100°C in the pressure range of interest. If the system is not to be completely pressurised they must also condense at temperatures above ambient at or below atmospheric pressure. When plotted on temperature-entropy coordinates as shown in Figure 10, the vapour saturation line should be isentropic or slightly "wetting" since a "drying" characteristic will result in superheated vapour being delivered to the condenser with a consequent high rate of heat exchange being necessary. Fluids which fulfil these requirements are Freon 113, Acetone and Methanol. Due to its lower saturation temperature and inert non-flammable nature, Freon 113 is to be preferred; however, it is not easily available in some countries. Acetone is preferable to methanol since it mixes readily with water and the hazard of fire orexplosion can be minimised by arranging that any leak or blow-off of vapour occurs through a water bath. Some thought is being given to the possibility of constructing a system in which the expansion engine and isolators are contained in an insulated bath of hot water. The condenser and feed pump, of course, could not be immersed in the same container.

4. ACKNOWLEDGMENTS

In conclusion, the author would like to thank the James Goldston School of Engineering and the Capricornia Institute for the use of their facilities in these ongoing projects, Messrs J W Bugler and J Czekanski for their interest and advice and Messrs W MacGregor and C Friend for their assistance in constructional work.

REFERENCES

Isaac, J J and Paranjpe, P.A.
Cycle optimisation for a Solar Turbopack
Proc. Int. Solar Energy Soc. Congress, January 1978

Bejerkile, J. & Zuchter,S
Rankine Cycle Working Fluid Selection and Specification Rationale
SAE Paper No. 690063

(BOILER VOLUME $\leq v_f/v_g$ AT WORKING PRESSURE.)

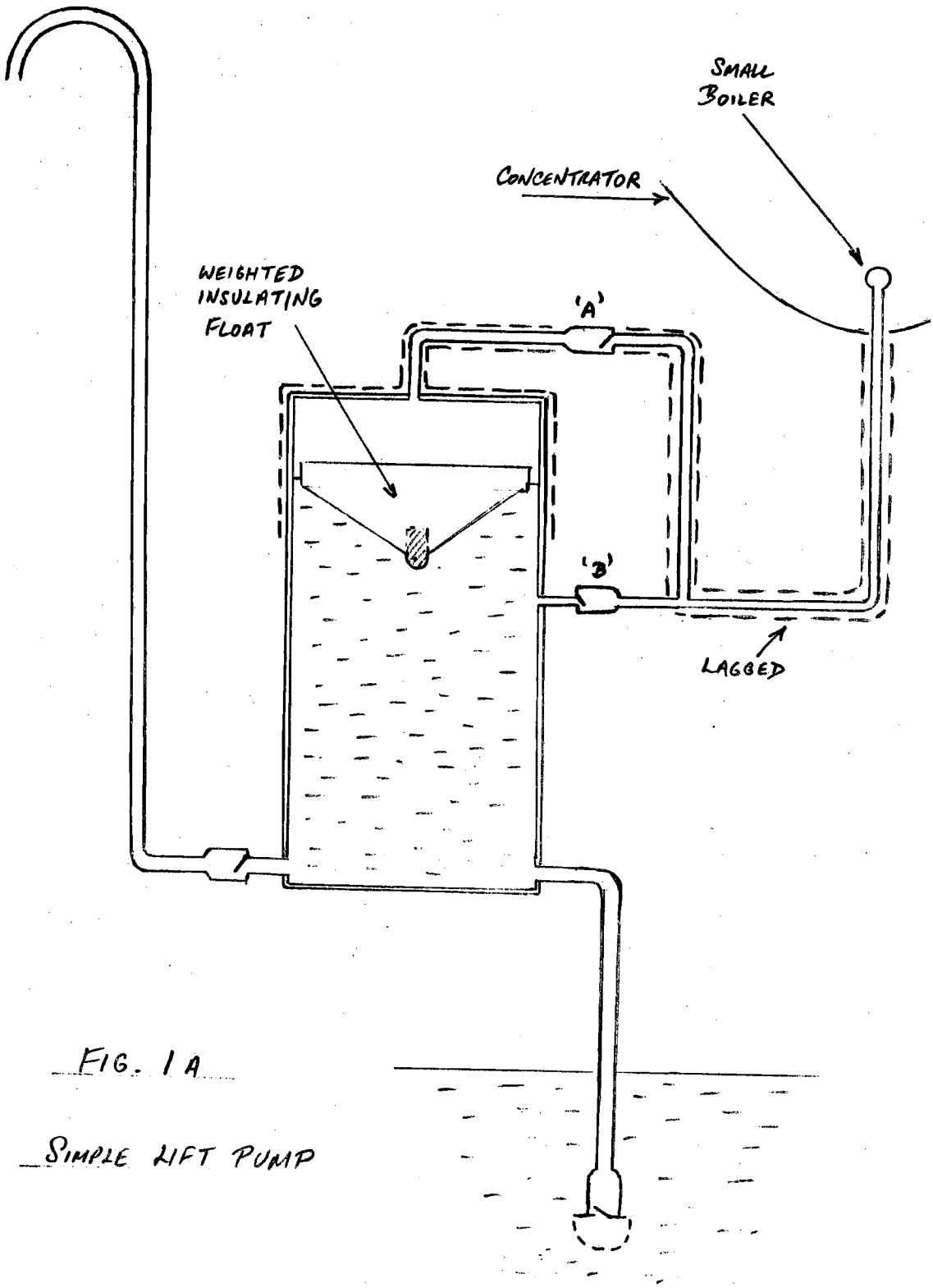

FIG. 1A

SIMPLE LIFT PUMP

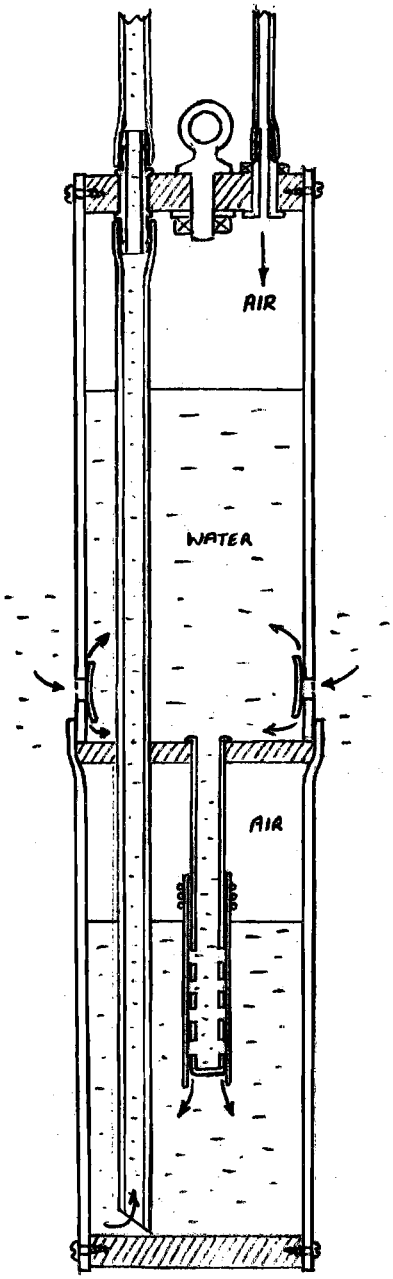

FIG. 1B. AIR - COUPLED BORE PUMP

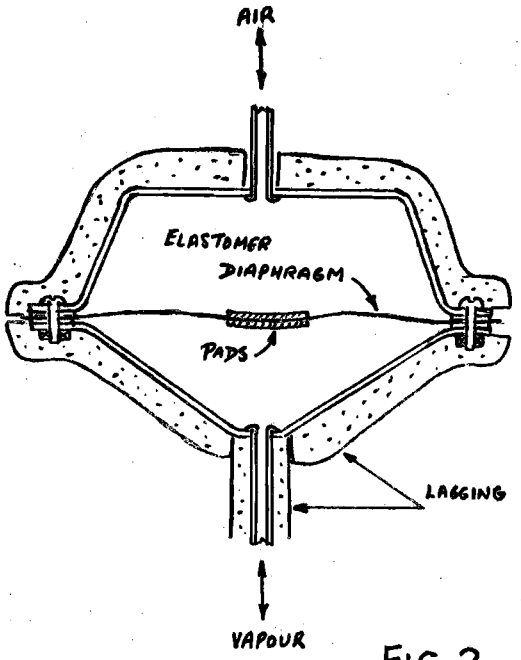

FIG 2

ISOLATOR

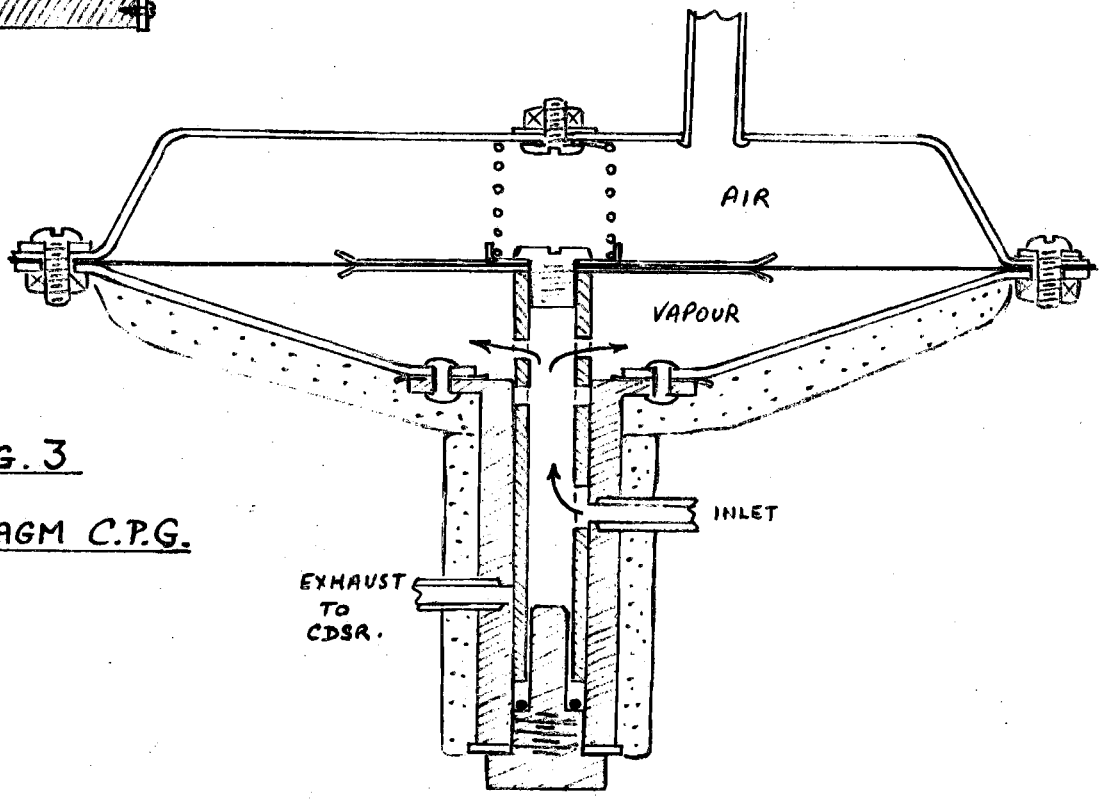

FIG. 3

DIAPHRAGM C.P.G.

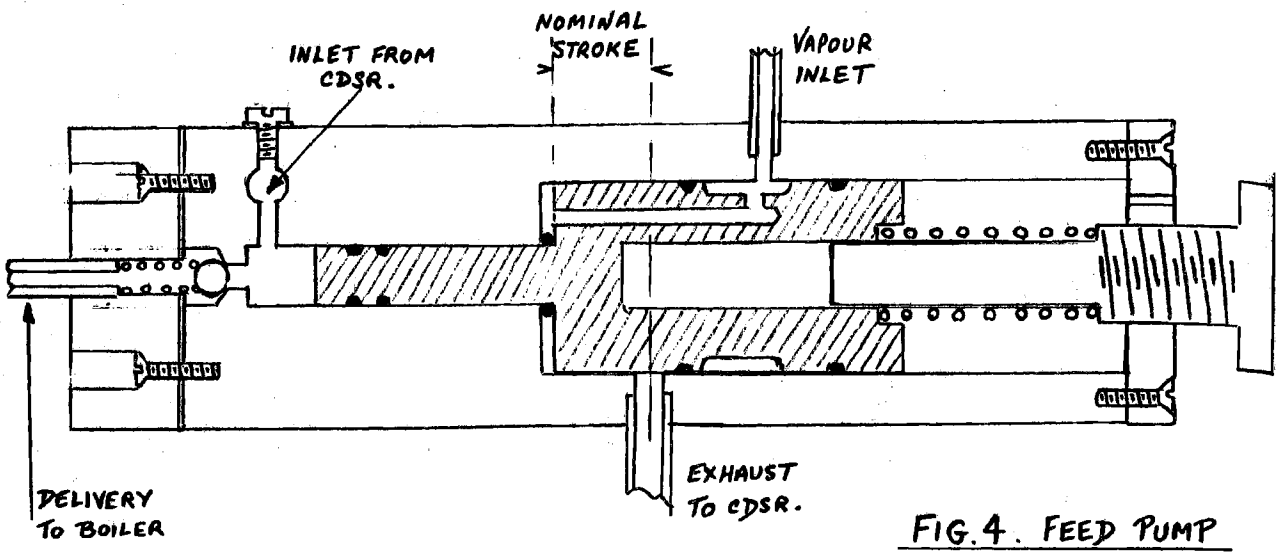

FIG. 4. FEED PUMP

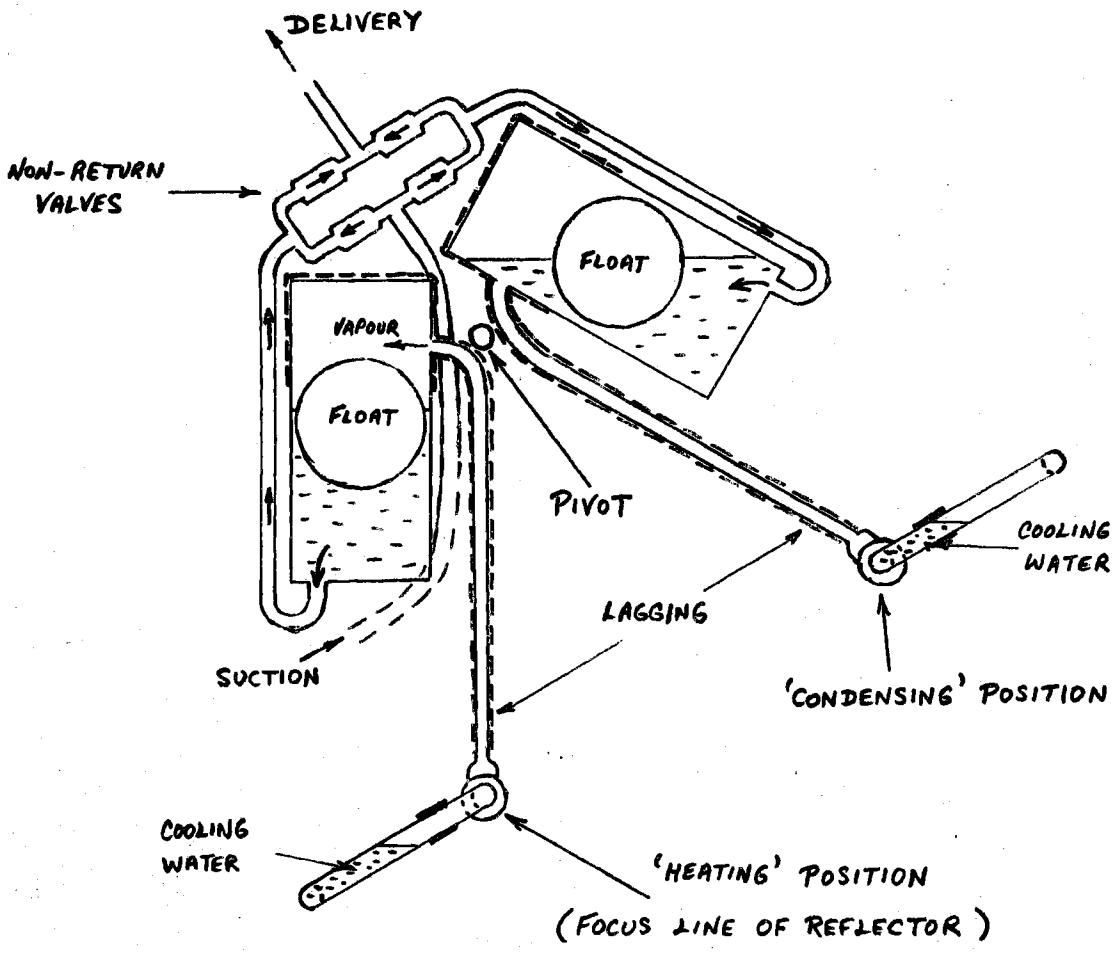

FIG. 5. DIRECT-PUMPING ROTARY MACHINE
(FRAME NOT SHOWN)

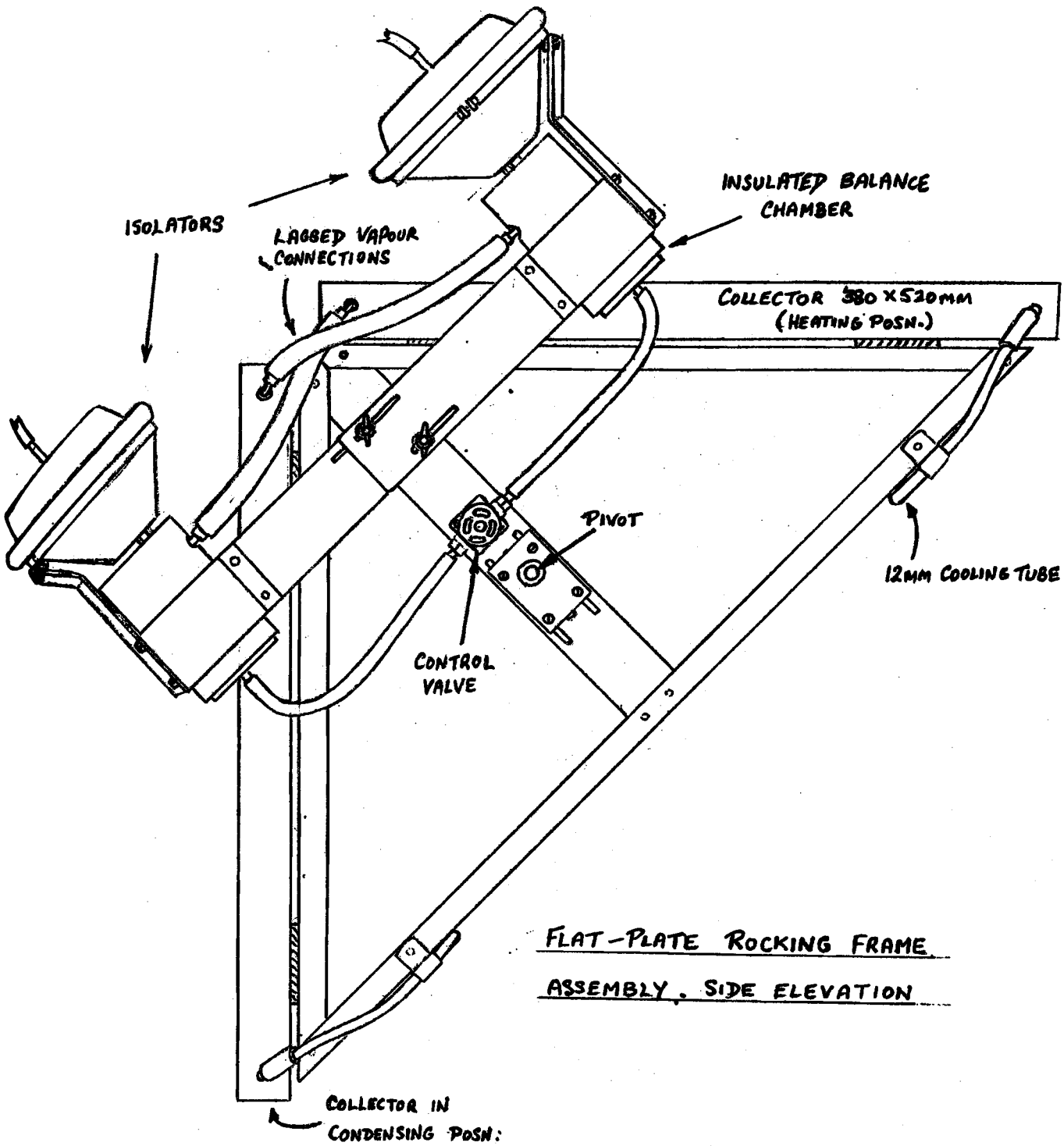

COLLECTOR - TUBE + PLATE ASSY.

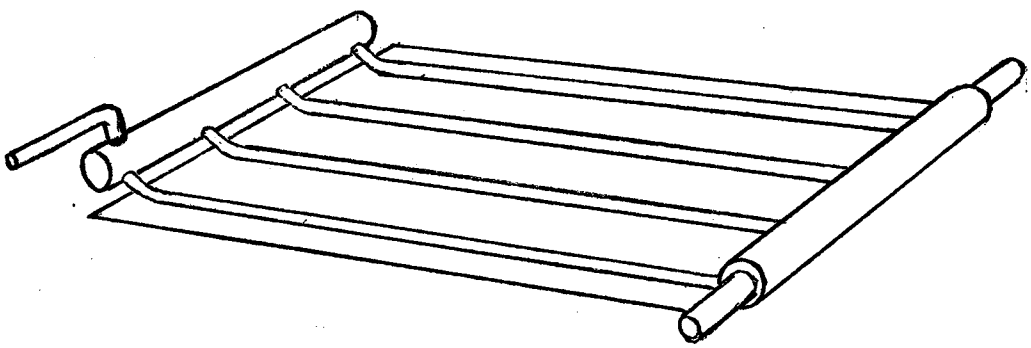

FIG. 6. FLAT-PLATE MACHINE

FIG. 7.

EXPERIMENTAL PULSE TUBE

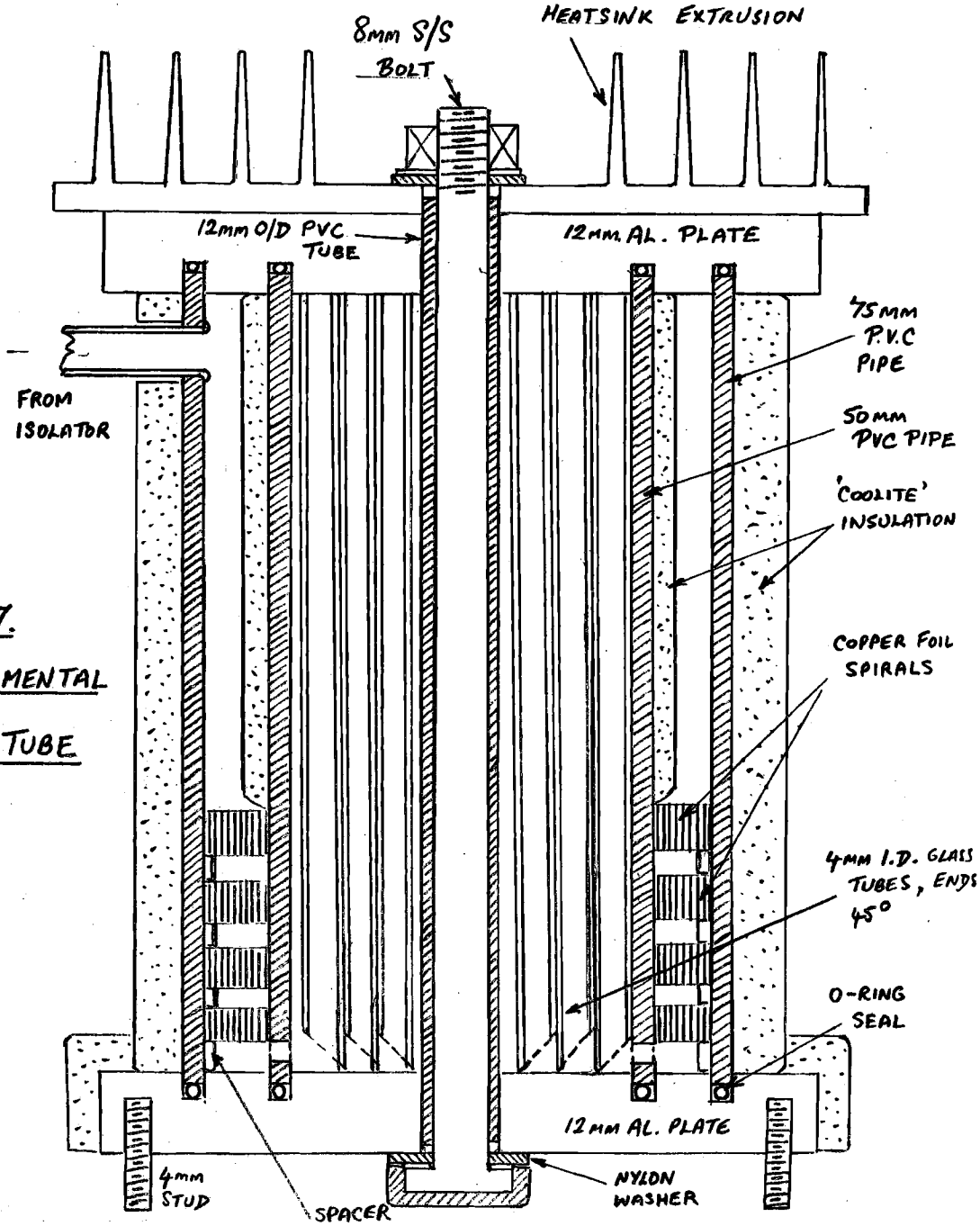

FIG. 8. SQUARE-WAVE SOURCE

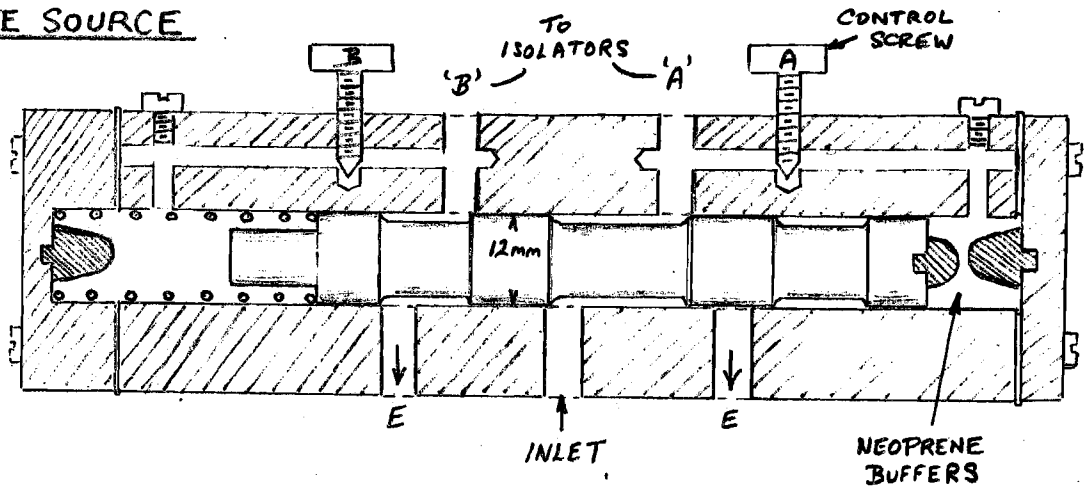

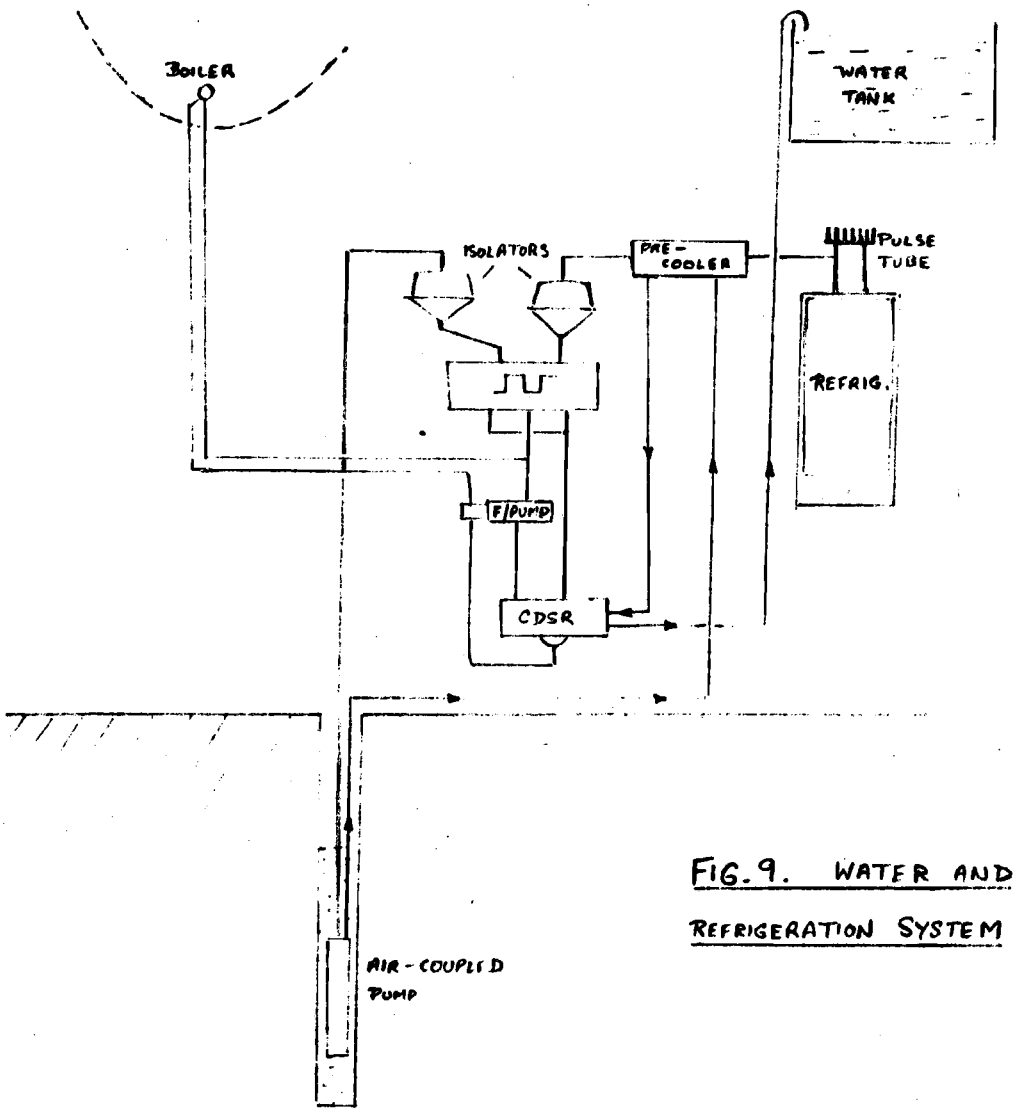

FIG. 9. WATER AND REFRIGERATION SYSTEM

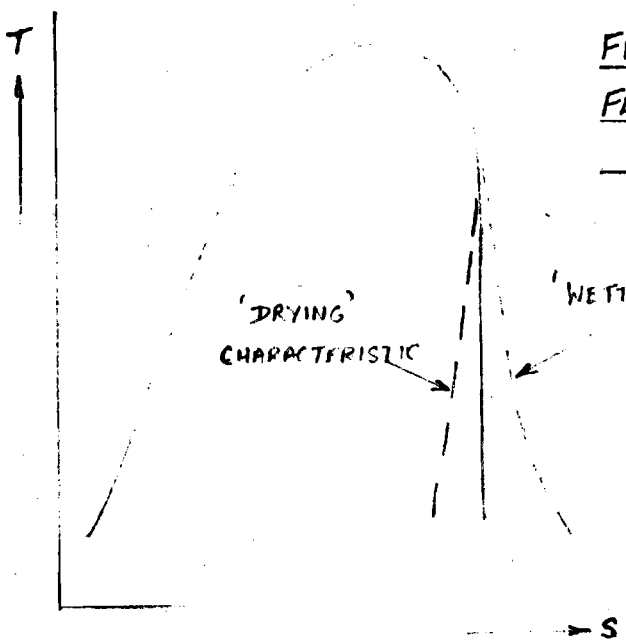

FIG 10. WORKING FLUID EXPANSION CHARACTERISTICS

SOME APPLICATIONS OF DC/DC CONVERTERS

Dr K C Daly

Senior Lecturer, Department of Systems and Control

University of New South Wales

SOME APPLICATIONS OF DC/DC CONVERTERS

by

K. C. Daly
School of Electrical Engineering and Computer Science
University of New South Wales
Kensington 2033
Australia

ABSTRACT

The application of DC/DC converters is far wider than their name would imply. When certain DC/DC converter topologies are connected in the appropriate configuration they can be used as inverters, amplifiers or special purpose rectifiers. In addition, they can provide four quadrant operation, input/output isolation and low electromagnetic interference. In this paper the basic properties of DC/DC converters are reviewed and some applications of pulse-width-modulated converters are presented with special reference to the sources and loads encountered in the renewable energy area.

1.0 INTRODUCTION

As their name implies, DC/DC converters absorb power from a DC source at one particular voltage or current level and supply it to a DC load at another voltage or current level. In this context what is regarded as a "DC" source or load can be interpreted rather broadly as one which is varying only slowly in comparison to the dynamics of the converter. So a DC/DC converter with a switching frequency of 50 kHz and a control bandwidth of 5kHz would "see" 50 Hz ripple on its supply voltage as virtually "DC".

DC/DC converters can be classified into two broad categories.

(i) Pulse-Width-Modulated (PWM): here level control between input and output is exercised by varying the duty-cycle of the semiconductor switches. This can be done in an almost endless variety of ways (e.g. constant frequency/variable on-time, constant on-time/variable off-time, constant off-time/variable on-time, two level or hysteresis control, current or flux programming etc.,)

(ii) Resonant: here level control is achieved by varying the switching frequency relative to the resonant frequency of an LC circuit (either series or parallel). These circuits were originally developed for thyristor applications and as a result retain the characteristic of semiconductor switch commutation by current reversal.

In this paper attention will be directed solely to PWM converters, mainly because much more work has been done on them and as a result they are much better

understood at this stage. Section 2 reviews the properties of the basic DC/DC converter topologies while section 3 presents some applications in the renewable energy field.

2.0 BASIC DC/DC CONVERTER PROPERTIES

Virtually all DC/DC converter topologies can be derived from three basic structures.

2.1 Buck Converter (figure 1)

The transistor is switched with duty-cycle D and when on, current flows from the source Vs, stores energy in L and supplies power to the load. When the transistor is off the diode conducts and energy stored in L is supplied to the load. The average load voltage is D*Vs and since D is less than unity the output voltage is less than the input voltage.

2.2 Boost Converter (figure 2)

In this case, when the transistor is on the diode is off and so energy is built up in the inductor while the load is supplied by the capacitor. At transistor turn-off the inductor energy is transferred to the load. Since D is less than unity, (1-D) is also less than unity and so (1/(1-D)) is greater than unity. Hence the output voltage is always greater than the input voltage.

2.3 Buck/Boost Converter (figure 3)

Here the energy is stored in the inductor at transistor turn-on and passed on to the load at turn-off. Note the inversion of the output voltage as well as the fact that for D less than 0.5 (D/(1-D)) < 1 and for 1>D>0.5, (D(1-D))>1 i.e. the buck/boost converter can be either voltage step-up or step-down depending on the magnitude of D.

2.4 Switching Cells

The generation of these converters by changing the connection of sources and loads relative to the switching cell shown in figure 4 has been noted by several authors [1], [2] and in conjunction with its dual switching cell shown in figure 5 a highly cogent theory of DC/DC converter topologies has emerged [2]. A method for generating topologies based on the mathematical structure of the describing differential equations is given in [3].

The three basic converters are composed of 2 unidirectional semiconductor switches and two energy storage, passive circuit elements. By allowing four passive, storage elements further converter structures emerge.

2.5 Buck Converter with Input Filter

The second order buck converter has a pulsating source current which can be made more nearly constant by the addition of an LC input filter as shown in figure 6.

2.6 Boost Converter with Output Filter

The second order boost converter has a pulsating output current which can be made more nearly constant by the addition of an LC output filter as shown in figure 7.

2.7 Cuk Converter (figure 8)

This is a 4th order generalisation of the second order buck/boost converter which makes both the input and output currents non-pulsating.

An alternative way of viewing these last three is as "current sources" and "current loads" connecting the dual switching cell in different orientations as depicted in figure 9. The ability of the fourth order converters to reduce ripple in the general case of coupled inductors is discussed in [4] for the case of the Cuk converter where the concept of "zero-ripple"was first propounded, and for the three as a class in [5].

All the converters mentioned so far have been non-isolated i.e. there is a direct connection between input and output. The basic isolated converters are the forward and flyback converters.

2.8 Forward Converter (figure 10)

When the transistor is turned on, energy is delivered to the load and the storage inductor via the transformer and D2. Energy is also stored in the magnetising inductance of the transformer and at transistor turn off this is returned to the supply via D1, while the storage inductor transfers energy to the load. Aside from the constraints imposed by the magnetising inductance the forward converter is functionally equivalent to the buck converter.

2.9 Flyback Converter (figure 11)

In this case energy is stored in the transformer during the transistor on-time and released to the secondary during the off-time. It is functionally equivalent to the buck/boost converter with the added flexibility of the turns ratio appearing in the equation for the output voltage.

2.10 Dual Forward/Flyback Converter

Instead of returning core energy to the supply during the transistor off-time a flyback-type secondary circuit can be used to transfer it to the load, as shown in figure 12. This circuit has received detailed attention in [6].

2.11 Full Bridge Converter (figure 13)

The main disadvantage of the forward, flyback and dual forward/flyback converters is that the transformer flux swing is unidirectional and so only half of the magnetic capacity of the core is being utilised. The full bridge (also half bridge and push-pull) converter overcome this problem by establishing a bidirectional flux swing via reversing the current direction in the primary of the transformer. The capacitor in series with the primary winding is needed to establish the magnetic

operating point in the presence of imbalances between the symmetric parts of the primary and secondary [7], [8].

2.12 Two Quadrant Converters

These converters are very useful when dealing with loads which can also act as sources e.g. batteries, DC motors/generators. The converter can be formed by combining the basic converters, replacing the unidirectional semiconductor switches by bidirectional ones. In the circuit of figure 14, when Q1 and D2 are used power is transferred from V1 to V2 with a buck converter topology. When Q2, D1 are used a boost topology transfers power from V2 to V1.

In the circuit of figure 15 a buck/boost topology is used in both directions (V1 to V2 uses Q1,D2 ; V2 to V1 uses Q2, D1). The dual of this circuit is the bidirectional Cuk converter [9] of figure 16, which uses capacitive energy storage between the two sources/loads.

2.13 Four Quadrant Converters

Four quadrant converters can be constructed by combining any of the two quadrant converters of section 2.12 back-to-back. For example the bidirectional buck or boost of figure 14 gives rise to four quadrant circuit of figure 17, or the bidirectional Cuk converter of figure 16 gives rise to the four quadrant circuit of figure 18. An excellent discussion of four quadrant converters can be found in [10].

3.0 APPLICATIONS OF DC/DC CONVERTERS.

Many of the topologies discussed in the preceding section have direct application in the renewable energy field if a DC load is to be driven. The energy supply could be any source of DC (slowly varying) power e.g. photovoltaic array, electrochemical, windmill powered generator (or alternator after rectification). A DC/DC converter could also be used as a pre-regulator stage in a photovoltaic to 50 Hz converter, to provide a constant input to a simple six-pulse inverter bridge rather rely on amplitude regulation in a more elaborate PWM inverter bridge [11].

Some of the more useful applications of DC/DC converters rely on modulating the duty-cycle of the converter at a frequency well below its bandwidth so that the converter's output voltage tracks the modulation. The voltage conversion ratios of the three basic converters are plotted in figure 19. Two points can be noted immediately.

(i) only the buck/boost gives a complete range of conversion ratios as the duty-cycle varies.
(ii) only the buck gives a linear relationship between duty-cycle ans conversion ratio.

This means that if the output of a converter were required to follow a half sinusoid starting from zero, then for the buck converter the duty-cycle needs to be a

half sinusoid also, while for the buck/boost the duty-cycle needs to be a nonlinear function of the sinusoid. On the other hand, if a conversion greater than 1 is required then a buck/boost will be needed or some other means used to increase the conversion of the buck (e.g. by a forward converter and adjusting the turns ratio).

A good illustration of this can be found in the various approaches to the problem of interfacing photovoltaic arrays to the utility mains. One of the first workers in this field was M. F. Schlecht and he proposed in [12] the circuit of figure 20. This is essentially a two quadrant flyback converter (isolated buck/boost). If Th1 is on then the voltage across C will follow the duty-cycle of Q1 with positive polarity, while if Th2 is on it will follow with a negative polarity. The duty-cycle and the firing of Th1/Th2 need to be synchronised with the AC line so that sinusoidal current is delivered to the utility. A modified version based on the same principle was given in [13] and is illustrated in figure 21. The main differences between the two is that in the latter the thyristors are replaced by transistors and the transformer only provides isolation (Lm is the DC/DC converter storage element).

The main disadvantages of both these schemes is that being based on the buck/boost principle, the connection between duty-cycle and output voltage is nonlinear and not easily generated by analogue means.

The circuit in figure 22 was developed at General Electric and is detailed in [14], [15]. The DC/DC converter is a full bridge forward converter which is based on the buck conversion principle and hence gives a linear variation of output voltage with duty-cycle. The transformer is purely for isolation and voltage level control.

This same principle was adopted in [16] although there are differences in the details of the implementation of the buck converter and the line interfacing as shown in figure 23. Here a push-pull converter has been selected and a transistor line interface. Flux-sensing in the transformer was used to adjust the transistor on-times to ensure a balanced flux-swing.

Another important area of application of DC/DC converters is in the control of power flow in photovoltaic/storage battery systems. Here several configurations of photovoltaic array, storage batteries and DC/DC converters have been proposed, each exploiting different forms of DC/DC converters. In [17] two structures are discussed; one termed "conventional" which consists of a unidirectional boost converter connecting the photovoltaic array and battery and a unidirectional buck converter connecting battery and load as shown in figure 24. The first converter acts as a battery charger and ideally incorporates a maximum power tracker, while the second converter is used to regulate the load voltage. Unfortunately, power reaching the load experiences two conversion processes and converter 1 must

be sufficiently large to handle the sum of load power plus battery charge power.

In an attempt to alleviate these problems a second configuration is discussed in [17]. It consists of a buck converter connecting directly the photovoltaic array and the load, paralleled by a bidirectional (boost in one direction, buck in the other) converter. However this converter is not operated in the buck direction with PWM, rather the transistor switch is turned on continuously making a direct connection between the battery and the converter connected to the load. This is illustrated in figure 25. Higher overall efficiency can be obtained with this configuration as only battery discharge power receives two conversions and one of these is at very high efficiency because it is via a statically closed switch.

A configuration which requires just one bidirectional DC/DC converter is described in [18] and illustrated in figure 26. Here a bidirectional Cuk converter controls the battery charge/discharge current to maintain a constant load voltage in the presence of photovoltaic array output variations.

DC/DC converters can also provide a novel form of 3 phase inverter with high quality (low harmonic distortion) AC waveforms. Three bidirectional converters are used with sinusoidally varying duty-cycles, and sinusoids shifted relative to each other by 120 degrees. One such system, based on the Cuk converter is described in [19] and takes the form shown in figure 27. Another circuit with fewer components but a more complex modulation pattern is described in [20]. Based on the buck/boost structure the circuit is shown in figure 28.

Another interesting application, described in [21], concerns a rectifier which draws nearly sinusoidal, in-phase current from the utility mains. As can be seen from a perusal of figure 29, the circuit consists of a full bridge rectifier followed by a DC/DC converter comprising a flyback converter with input filter. By adjusting the converter duty-cycle the output voltage can be kept constant while the input current and voltage vary together.

4.0 CONCLUSION

This paper has reviewed the basic topologies of PWM DC/DC converters and examined some applications of these converters in the renewable energy area. It should be pointed out that research into DC/DC converters is very active worldwide, driven by the dual (and usually conflicting) requirements of high efficiency and low weight. New converter topologies, new materials and better control techniques are emerging almost continually in what is still a rapidly expanding area.

5.0 REFERENCES

[1] E. E. Landsman, "A Unifying Derivation of Switching DC-DC Converter Topologies", Proc. IEEE PESC 1979, pp 239-243.

[2] S. Cuk, "General Topological Properties of Switching Structures", Proc. IEEE PESC 1979, pp 109-130.
[3] R. W. Erickson, "Synthesis of Switched-Mode Converters", Proc. IEEE PESC 1983, pp9-22.
[4] S. Cuk and R. D. Middlebrook, "Coupled-Inductor and Other Extensions of a New Optimum Topology Switching DC-TO-DC Converter", Proc. IEEE IAS 1977, pp1110-1126.
[5] K. C. Daly, "Ripple Determination for Switch-Mode DC/DC Converters", Proc. IEE part G (Electronic Systems and Circuits) vol. 129, no. 5, October 1982, pp229-234.
[6] J. N. Park and T. R. Zaloum, "A Dual Mode Forward/Flyback Converter", Proc. IEEE PESC 1982, pp 3-13.
[7] K. C. Daly, "Some Generalisations of State Space Averaged Modelling in Continuous Mode", To be published Int. J. Electronics.
[8] R. Redl, M. Dombe and N. O. Sokal, "How to Predict and Limit Volt-Second Unbalance in Voltage-Fed Push-Pull Power Converters", Proc. Int PCI/MOTORCON, Orlando, April 1983, pp1-20.
[9] R. D. Middlebrook and S. Cuk, "Isolation and Multiple Output Extensions of a New Optimum Topology Switching DC-TO-DC Converter", Proc. IEEE PESC 1975, pp 256-264.
[10]S. Cuk and R. W. Erickson, "A Conceptually New High-Frequency Switched-Mode Power Amplifier Technique Eliminates Current Ripple", Proc. POWERCON ?, ????, pp-G-3-1 to G-3-22.
[11]R. P. Severns, "A New Current Fed Converter Topology", Proc. IEEE PESC 1979, pp 277-283.
[12]M. F. Schlecht, "A Line Interfaced Inverter with Active Control of the Output Current Waveform", Proc. IEEE PESC 1980, pp 234-241.
[13]M. F. Schlecht, "Time-Varying Gains for Power Circuits with Active Waveshaping", Proc. IEEE PESC 1981, pp 52 - 59.
[14]B. K. Bose, P. M. Szczesny and R. L. Steigerwald, "Microcomputer Control of a Residential Photovoltaic Power Conditioning System", Proc. IEEE IAS 1984, pp 852-859.
[15]R. L. Steigerwald, A. Ferraro and R. E. Tompkins, "Investigation of a Family of Power Conditioners Integrated into the Utility Grid (Residential Power Level)", Report No. 81CRD259, Oct 1981, GE Corporation, Schenectady, New York
[16]A. Cocconi, S. Cuk and R. D. Middlebrook, "High-Frequency Isolated 4KW Photovoltaiv Inverter for Utility Interface", Proc. 7th International PCI Conference, 1983, pp 39-59.
[17]H. Matsuo and F. Kurokawa, "New Solar Cell Power Supply System Using a Boost Type Bidirectional DC-DC Converter", Proc. IEEE PESC 1982, pp 14-19.
[18]R. D. Middlebrook, S. Cuk and W. Behen, "A New Battery Charger/Discharger Converter", Proc. IEEE PESC 1978, pp 251-255.
[19]F. Barzegar and S. Cuk, "Solid-State Drives for Induction Motors: Early Technology to Current Research", proc. IEEE PESC 1982, pp 92-102.

[20]K. D. T. Ngo, S. Cuk and R. D. Middlebrook, "A New Flyback DC-To-Three-Phase Converter with Sinusoidal Outputs", Proc. IEEE PESC 1983, pp 377-388.
[21]M. J. Kocher and R. L. Steigerwald, "An AC to DC Converter with High Quality Input Waveforms", Proc. IEEE PESC 1982, pp 63-75.

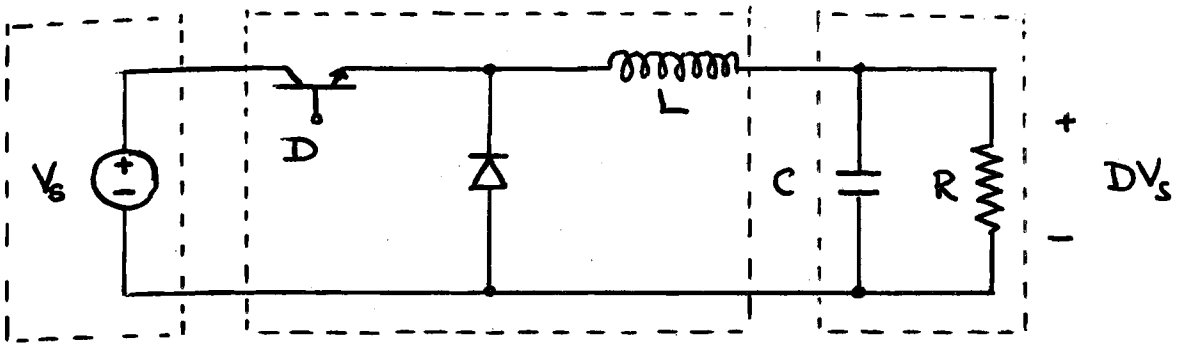

Figure 1: Buck converter

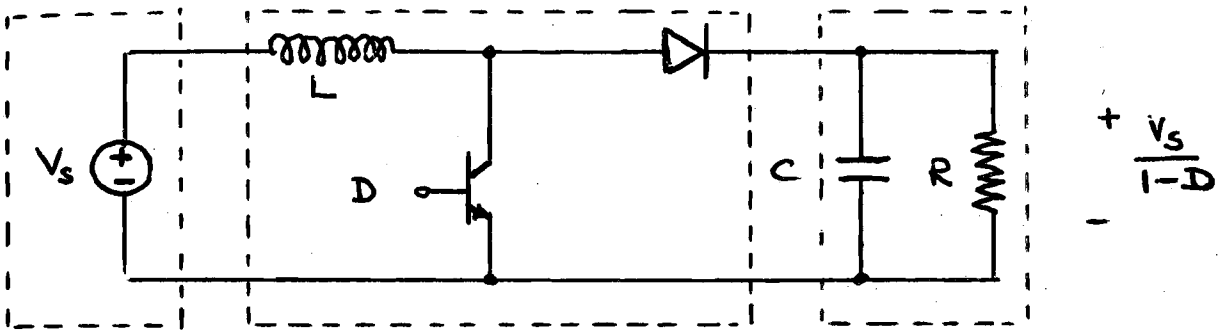

Figure 2: Boost converter

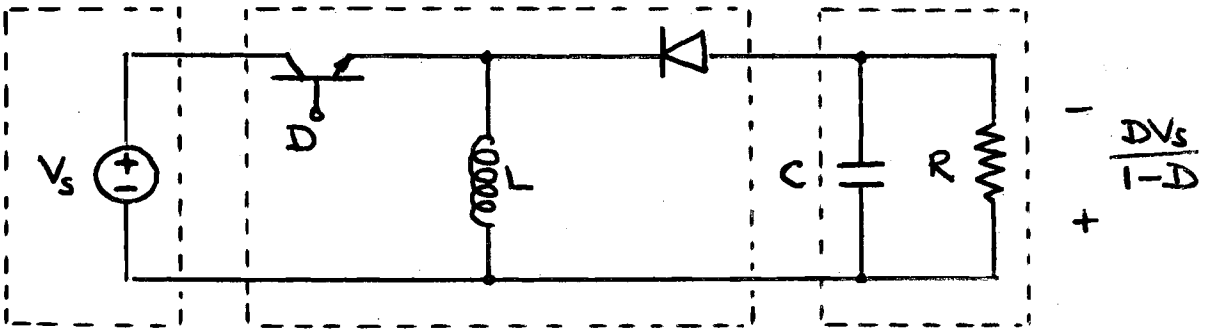

Figure 3: Buck/Boost converter

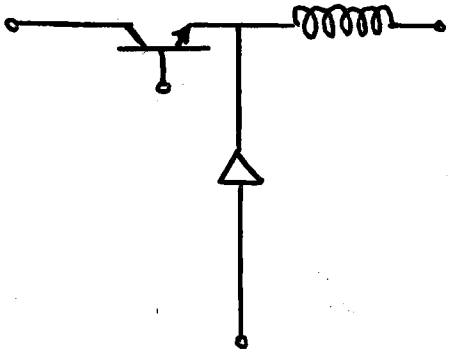

Figure 4: Switching cell

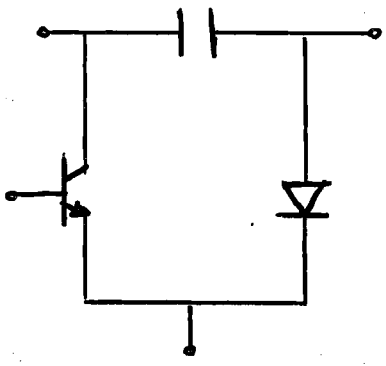

Figure 5: Dual switching cell

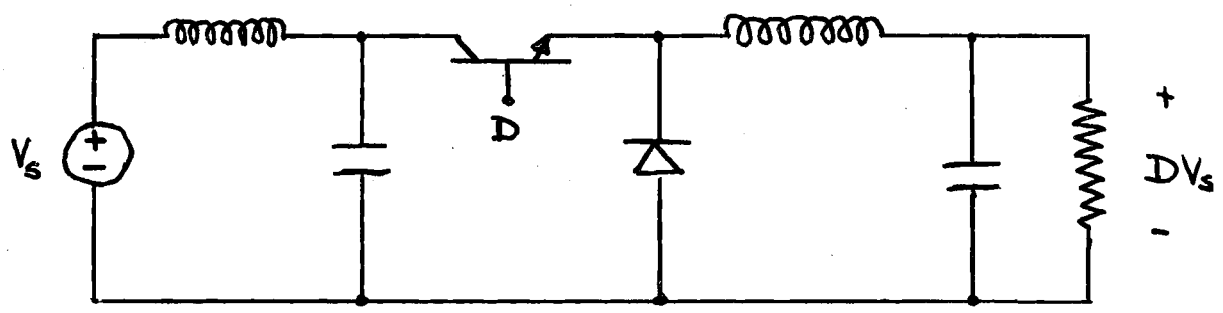

Figure 6: Buck converter with input filter

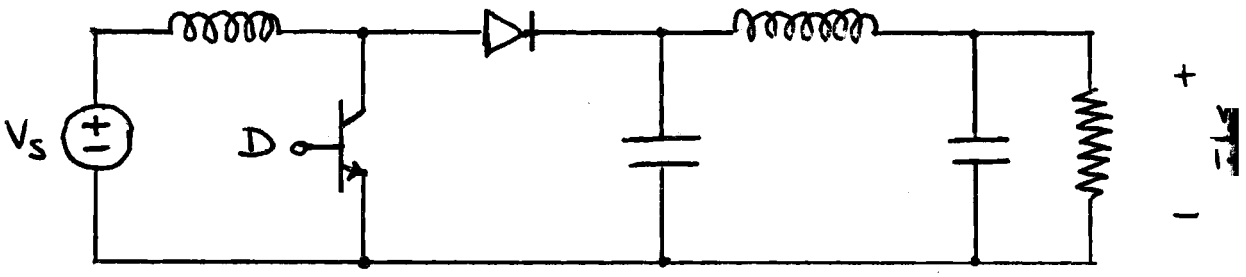

Figure 7: Boost converter with output filter

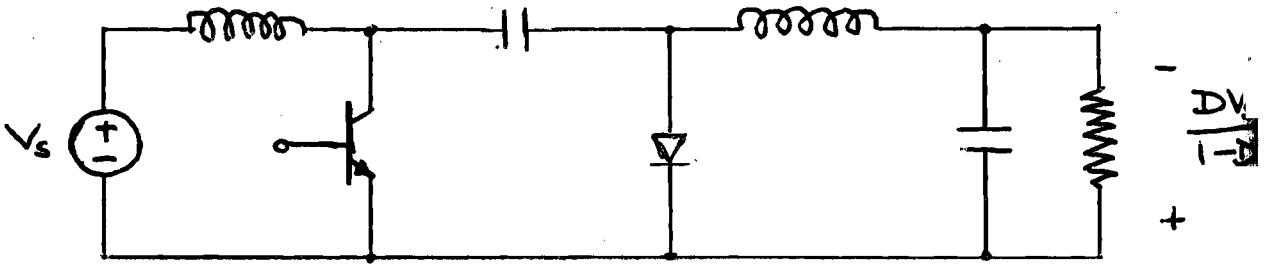

Figure 8: Cuk converter

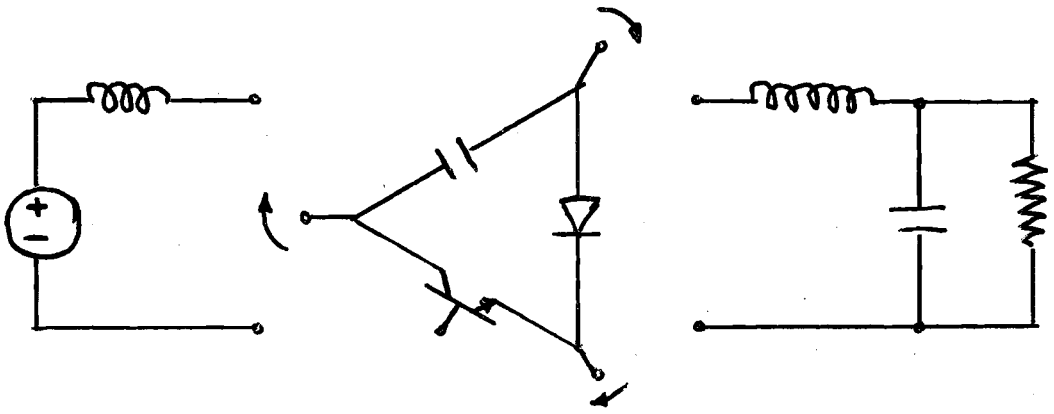

Figure 9: Generation of 4th order converters with dual switching cell

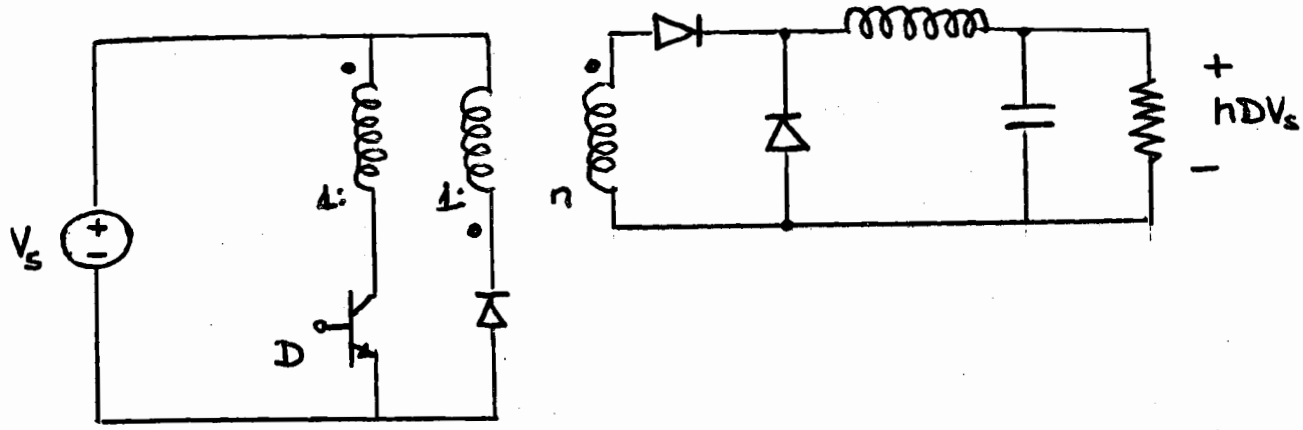

Figure 10: Forward converter

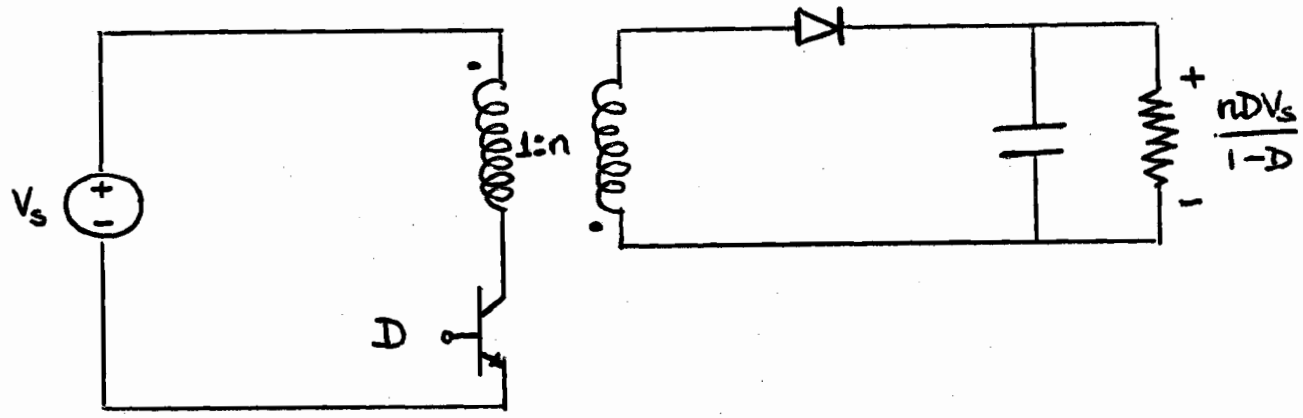

Figure 11: Flyback converter

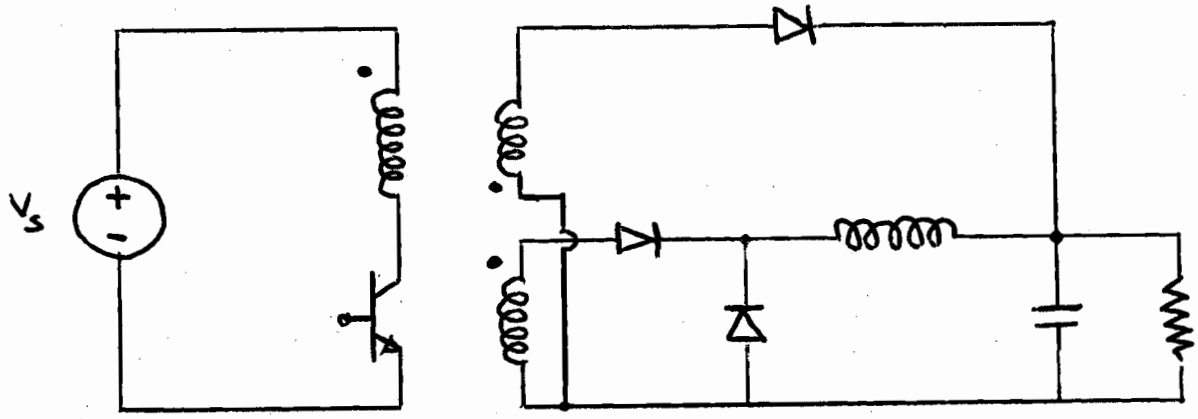

Figure 12: Dual forward/flyback converter

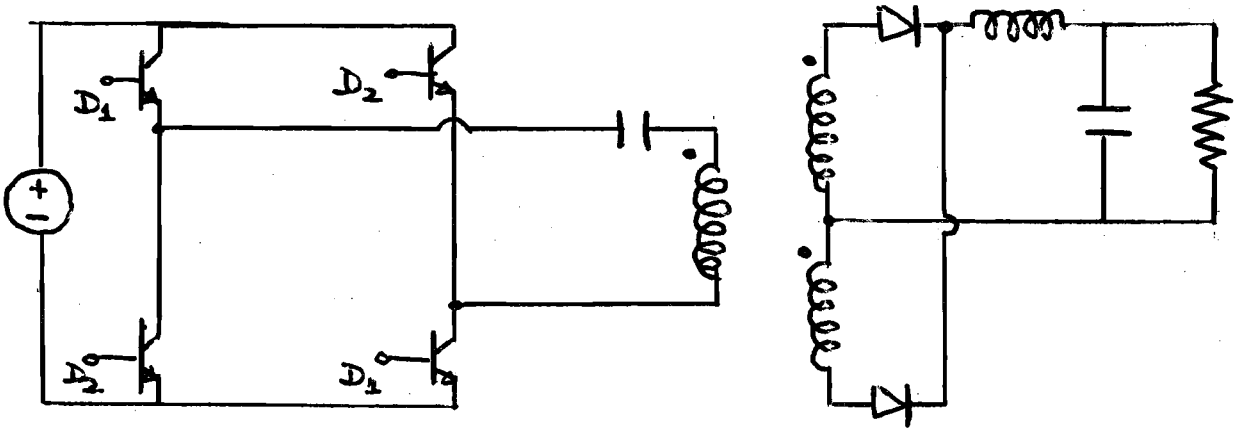

Figure 13: Full bridge converter

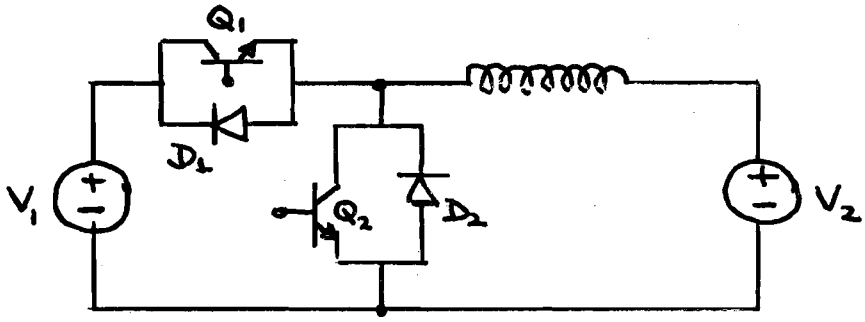

Figure 14: Bidirectional buck or boost

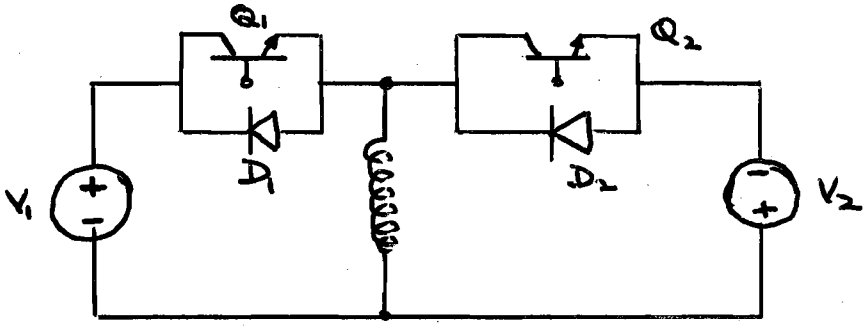

Figure 15: Bidirectional buck/boost

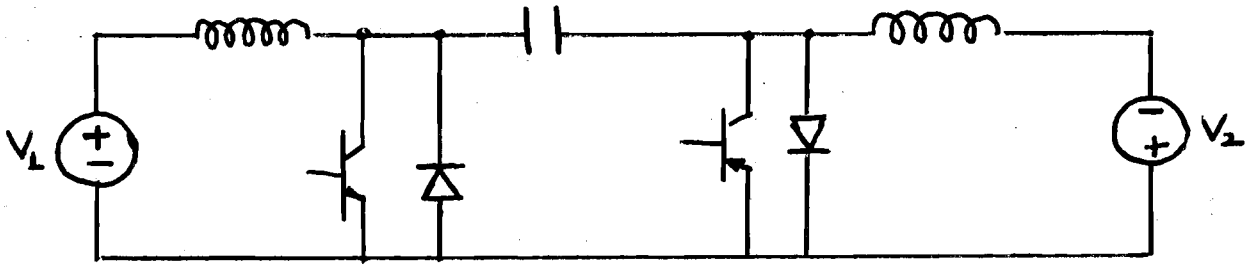

Figure 16: Bidirectional Cuk converter

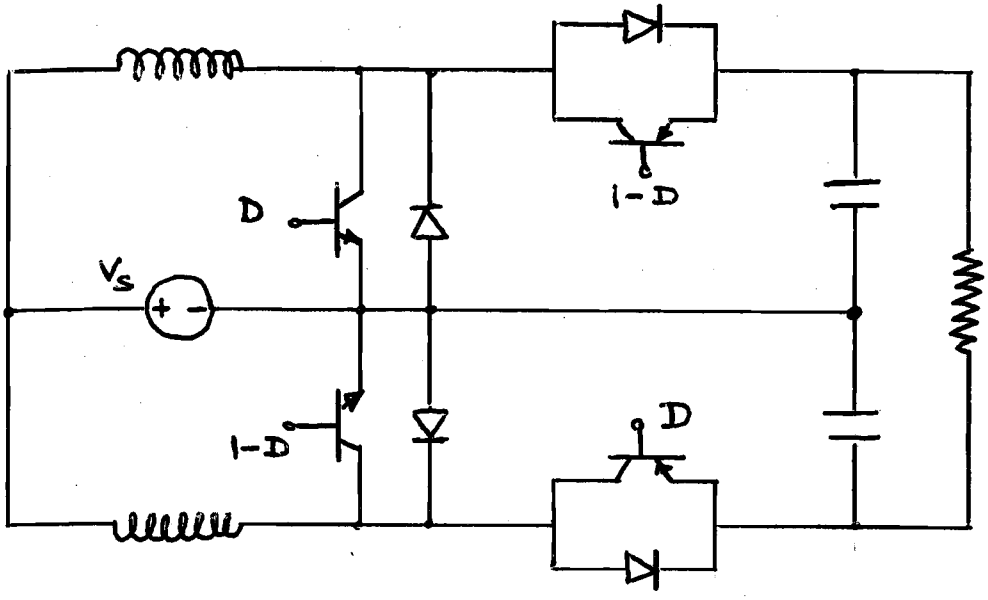

Figure 17: Four quadrant buck or boost ω

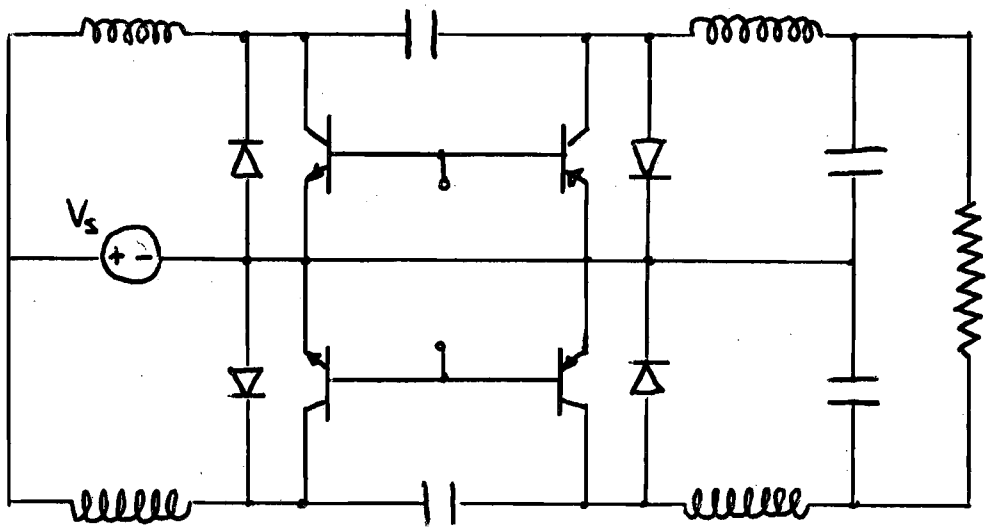

Figure 18: Four quadrant Cuk converter

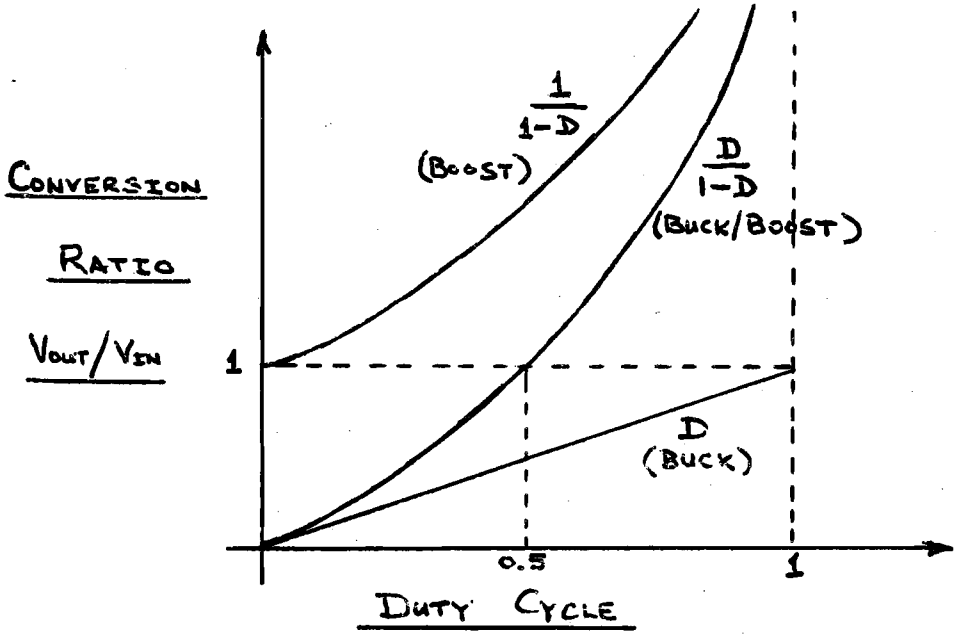

Figure 19: Converter conversion ratios

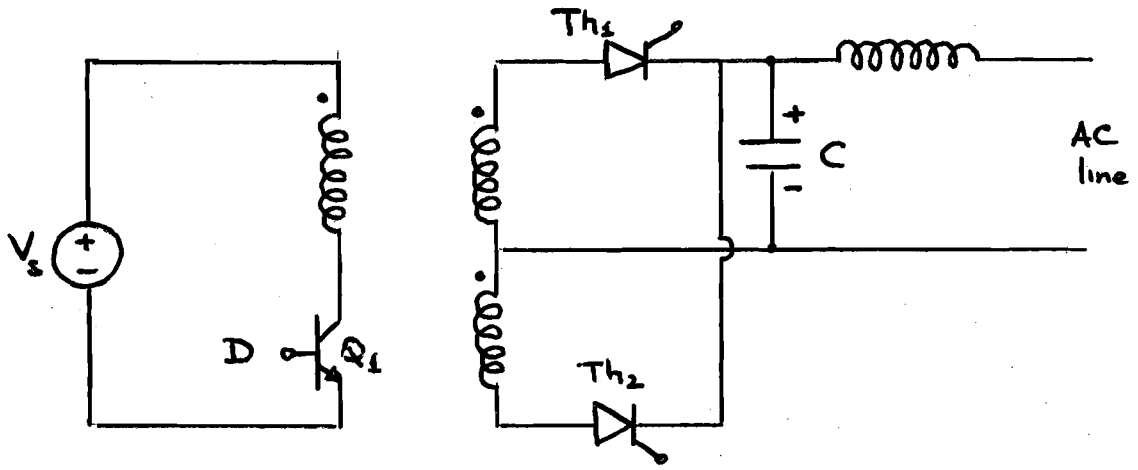

Figure 20: DC to utility mains circuit

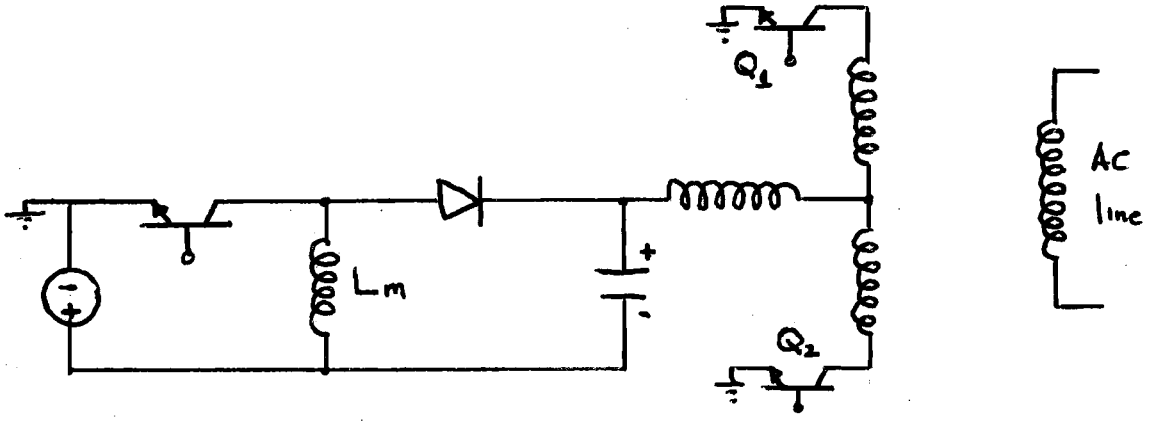

Figure 21: Buck/Boost based DC to utility mains

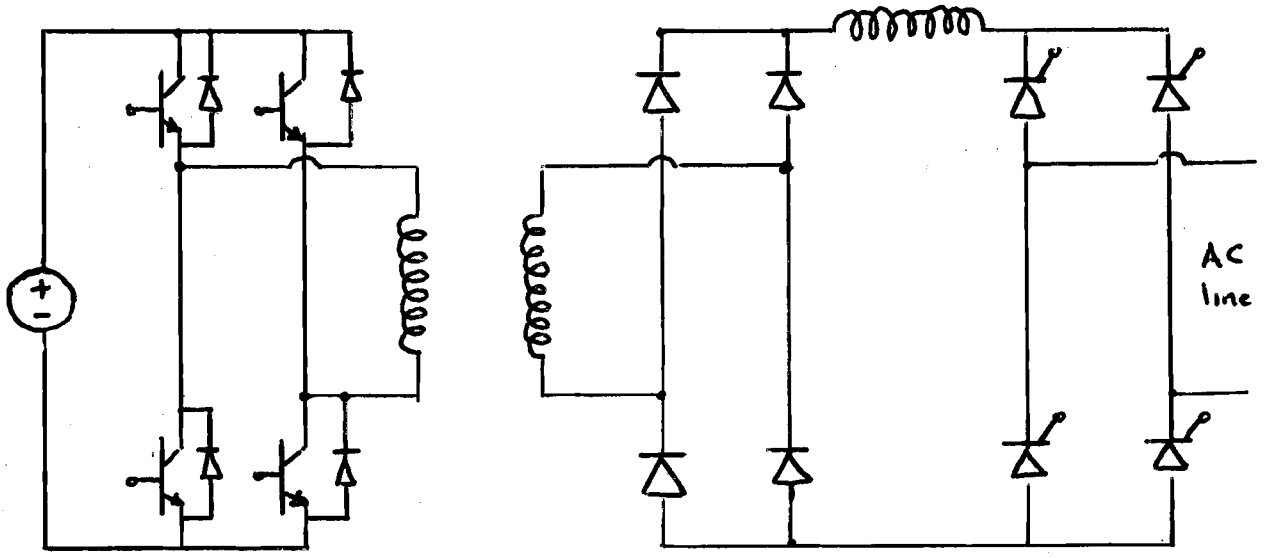

Figure 22: Buck based DC to utility mains

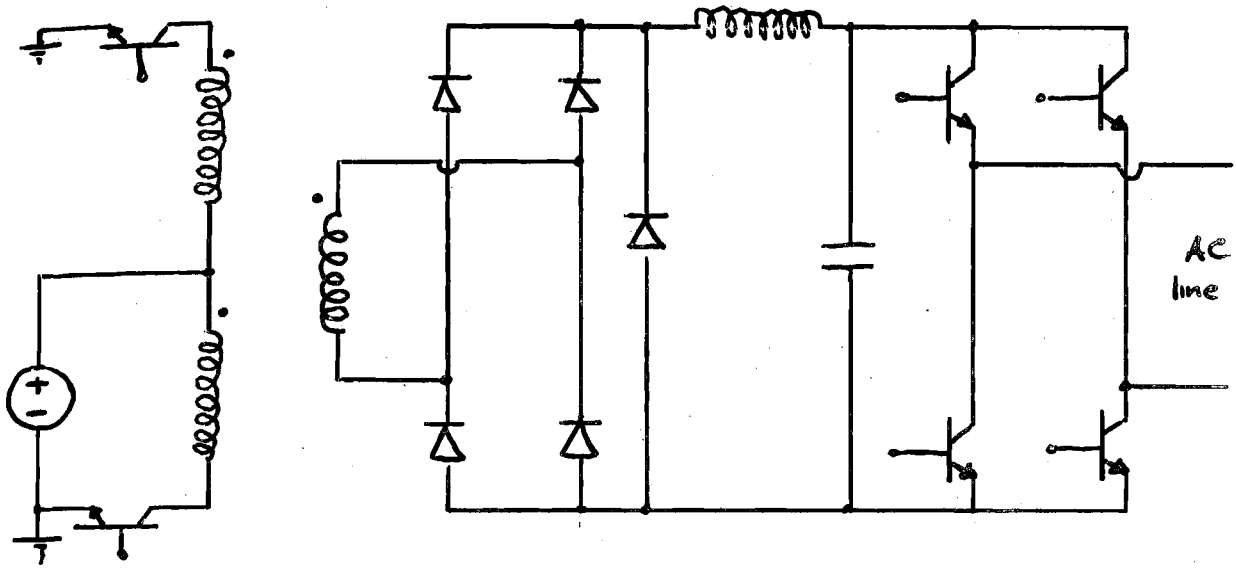

Figure 23: Alternative buck based DC to utility mains

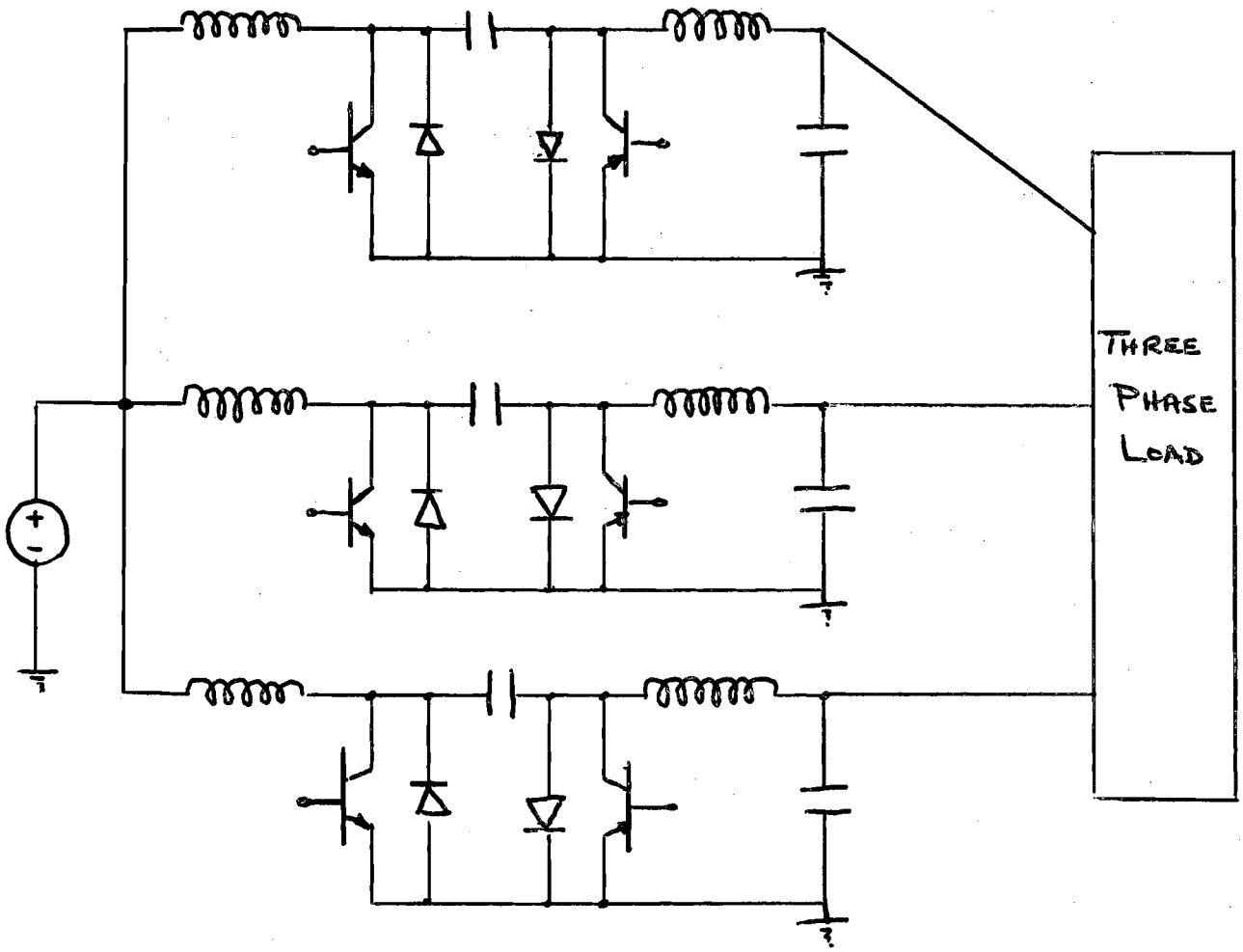

Figure 24: Three phase inverter based on Cuk converter

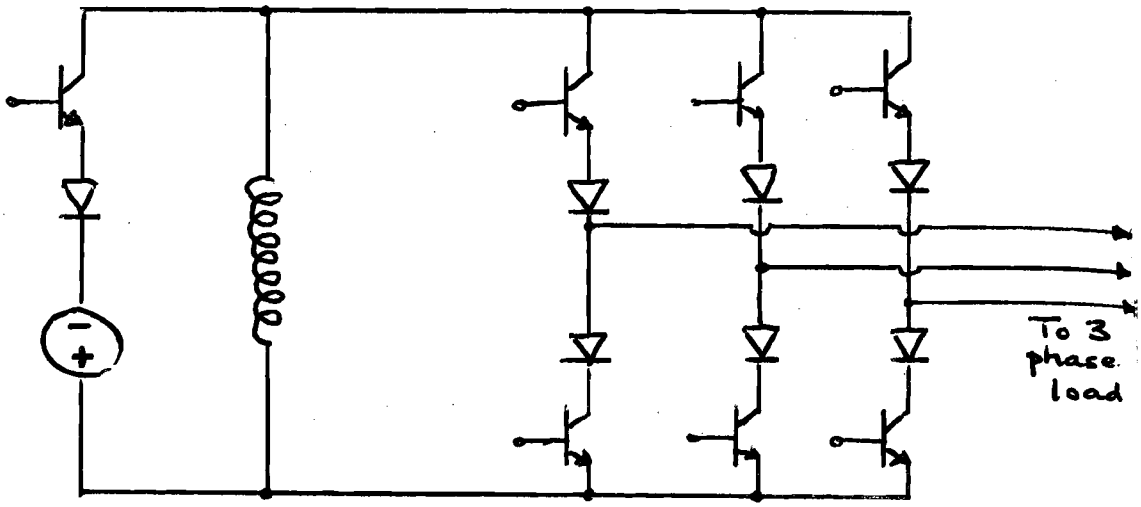

Figure 25: Three phase inverter based on buck/boost converter

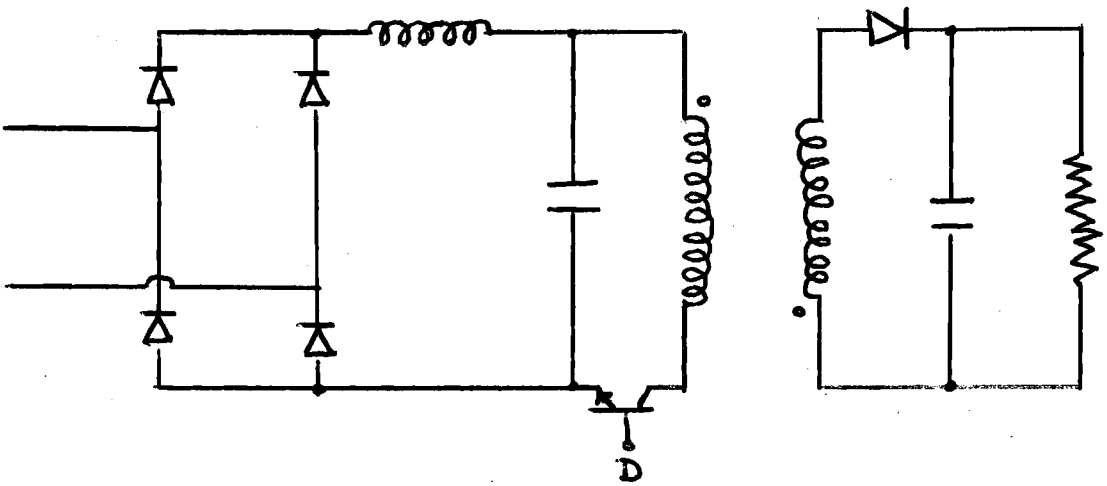

Figure 26: Unity power factor converter

UNINTERRUPTABLE POWER SUPPLY FOR COMPUTERS AND COMMUNICATIONS

Mr B Wynne

Queensland Electricity Commission, Rockhampton

UNINTERRUPTABLE POWER SUPPLY FOR COMPUTERS AND COMMUNICATIONS

A USER'S POINT OF VIEW

INDEX

1.0 INTRODUCTION

Reliability of the electricity supply network is ultimately a matter of cost. The standard of supply to consumers at large is as high as can be justified while keeping the cost of supply as low as possible. There will always be a section of consumers for which this standard is insufficient as the effects of infrequent disruption are sufficiently serious to warrant their own capital expenditure on so called "Uninterruptable Power Supplies".

An Uninterruptable Power Supply (U.P.S.) system is, for many users the only solution. However, there is from the user's point of view (which from necessity is pessimistic) an unforgiveable error in the nomenclature used in describing the system - "uninterruptable".

A more acceptable term would be "High Reliability Power Supply"; from experience and observation, nothing is uninterruptable. Systems termed "uninterruptable" have failed due to design faults, component failure and the most complex and unknown quantity, human intervention. Human error in the operation and maintenance of "uninterruptable power supplies" must be one of the highest priorities when considering the design, manufacture or purchase of such a system.

2.0 THE SYSTEM

The U.P.S. system is required to deliver accurately controlled output voltage and frequency, independent of the supply network's disturbances and transients.

A basic U.P.S. installation is shown in figure 1 attached. The items of individual equipment which form a U.P.S. are:-

(i) The switchboard, which carries out the function of switching the A.C. supplies for the U.P.S. system. It is usual to have at least one public network feeder into the board for normal operation and a standby supply, usually a generating set to supply the system in the event of a prolonged public network outage.

(ii) Battery Charger - this item serves a dual purpose:-

(a) To provide a D.C. input for the inverter; and

(b) Maintain the full capacity of the standby battery bank.

(iii) Battery Bank - usually consisting of high performance pasted plate planté lead-acid cells which provide the DC input to the inverter on loss of the public network until either the network is restored or the generating set comes on line.

(iv) Inverter - today a solid state device which converts a DC input to an AC sine wave output of accurate frequency and magnitude to a specialised load, i.e. computer or communications equipment.

2.0 THE SYSTEM (Ctd)

(v) Static Change-over Switch - a solid state switch which will automatically change over from the inverter supply to the standby supply whilst maintaining (no break) the load. This changeover to the standby supply occurs on either failure of the inverter or for maintenance of the inverter, battery, charger system.

(vi) Line Conditioner (Standby Supply) - a passive device to ensure no harmful harmonics, noise or voltage spikes/ fluctuations reach the load from the switchboard.

2.1 MODE OF OPERATION

The operation of the U.P.S. Illustrated in figure 1 is for the AC switchboard to be supplied from the public network. The battery charger AC is then derived from the switchboard and this in turn supplies DC to the inverter and battery bank. The inverter output then supplies the load via a static switch.

In the event of a public network AC failure, the battery bank will immediately supply the inverter input which maintains supply to the load. The diesel generator supply is time delayed, such that if the public supply fails to return within a predetermined period (usually 5 minutes), it automatically starts and supplies the switchboard until return of the public supply. (The generating set will maintain supply for at least 10 minutes after the network supply returns to ensure that the supply is reliable; once that period expires, the set will go "off line" and the public network again will supply the switchboard.)

If the battery charger, battery or inverter fail, or the inverter output falls out of its performance figures, the static switch will without any loss of supply to the load, change supply of the inverter to the standby supply. (The inverter and standby supply normally run in synchronism.)

The standby supply can also be selected manually for maintenance of the charger, battery, inverter system. If the static switch fails there is a manual switch (make-before-break) which will bypass the static switch and supply the load from the standby supply.

Figure 2 attached shows a High Reliability U.P.S. system that is used for a computer supply within the Queensland Electricity Commission's control network.

It is the basic U.P.S. system in figure 1 doubled up. Failure of the public network supply is reduced by two separate supplies (from independent primary feeders) and two charger/battery inverter systems both running in synchronism feeding a common supply bus. In the event of one unit failing, the other can supply the full load requirements.

Both inverters run synchronised to the standby supply; however, if the standby supply drops out of set limits (frequency and voltage), both inverters will run free of the standby supply, but with one inverter selected as master to control frequency and voltage.

2.1 MODE OF OPERATION (Ctd)

Photographs showing the actual system represented in figure 2 are enclosed in Appendix A.

3.0 DETAILED PARAMETERS

Detailed performance parameters for the individual U.P.S. components are listed below:-

3.1 The Inverter - This item of plant operates with a D.C. input, usually from a battery bank/charger consisting of lead-acid cells (see Section 3.3) and by means of a solid state device (thyristor switching) or a rotating machine (D.C. motor driving an alternator - now becoming out-dated) produces a stable, high accuracy A.C. supply.

Typical performance characteristics are:-

(a) $$\text{Efficiency} = \frac{\text{A.C. output power (kW)} \times 100\%}{\text{D.C. input power (kW)}}$$

This figure should be greater than 80% when output is equal to or greater than half the rated kVA and working temperatures within the range 0°C to 40°C.

(b) Rating - An inverter must be able to supply the load at all times independent of the load variations. For example, most loads have a power factor of 0.8 lagging, hence the inverter must cope with load variations of unity to 0.8 lagging.

(c) Output Voltage Regulation - The voltage output should be regulated to within ±2% within the limits of D.C. input range (see Section 3.3) and also with battery supply under boost conditions.

With 3 phase rectifiers with unbalanced load conditions up to and including full load on one phase and no load on other phases, the phase to neutral output voltage regulation on all phases should be within ±2% under all service conditions.

(d) Output Frequency Regulation - The frequency should be kept within ±1% for any combination of environment and input conditions and for any load within its rating. A further option employed on most inverters is the facility to synchronise with the public distribution network; the inverter should then be able to follow the public network frequency unless that frequency varies by more than ±1% - in that case, the inverter should run with its own internally generated frequency.

(e) Harmonic Distortion - The inverter output should be a sine wave with total RMS harmonic content less than 5% and with the RMS value of any single harmonic less than 3% under any combination of environmental and input condition and any load within its rating.

3.0 DETAILED PARAMETERS (Ctd)

3.1 The Inverter (Ctd)

(f) Overload Capacity - The inverter should be able to sustain an overload of 125% for one (1) minute whilst maintaining the output voltage and frequency within the specified limits. If the overload exceeds one (1) minute, the inverter shall trip with a sufficiently short period to ensure no damage results to the inverter.

(g) Transient Performance - If a step change in load from 0% to 100% or from 100% to 0% occurs, the output voltage should not vary by greater than 15% and should recover to ±5% of adjusted output voltage within one (1) cycle and to ±2% of the adjusted output voltage within 5 cycles.

(h) Protection - The inverter should be equipped with alarms such as high temperature, low D.C. volts, inverter out of synch. with public network (if facility incorporated), cooling fan fail (if applicable), capacitor fuse fail (if applicable), inverter failure, overcurrent. It should also have adequate protection devices that will in the event of an internal failure ensure a controlled shutdown which will isolate the Input and Output circuits. The following conditions should also precipitate a controlled shutdown and isolation:-

- Output under/over voltage
- Output frequency beyond limits
- Extended overcurrent
- Input D.C. volts low.

3.2 Battery Charger - This plant operates from the public A.C. network converting it (in solid state by means of thyristor switching) to a suitable D.C. supply for battery charging (see Section 3.3) and the inverter D.C. Input (see Section 2.11).

(a) Rating - The charger should be capable of supplying full load under any combination of the following conditions:-

Voltage ±15% (phase to phase)
Frequency ±5%
Temperature 0°C to 40°C
Humidity to 90% non-condensing

The rating must have adequate capacity to supply the full input load of the inverter and recharge a depleted battery simultaneously.

3.0 DETAILED PARAMETERS (Ctd)

3.2 Battery Charger (Ctd)

(b) Output Voltage and Regulation - The output voltage if charging lead/acid cells (which is the norm) should be continuously adjustable between 2.10 V/cell and 2.30 V/cell with a boost facility of 2.4 V/cell. The output voltage should be maintained to within ±2% of the adjusted output voltage for any load from no load to full load for all conditions of input voltage described in (a) above.

The R.M.S. of ripple current supplied from the output should not exceed 3% of the D.C. current rating of the charger under any operating conditions.

(c) Current Limit - The charger should have the facility to limit output current from 20% to 100% of the rated capacity of the charger. It must also be capable of running continuously in current limit mode. Current limiting should also be provided at the battery terminals to protect a depleted battery from being damaged by too great a charging current.

(d) Circuit Protection and Alarms - Fuses should be located in each phase of the A.C. input, both sides of the D.C. output and the main filter capacitor circuit. On the application of a short circuit on the charger's D.C. output terminals, it should move into current limit mode until the short circuit is removed, then return to normal service.

An over-voltage protection on the D.C. output should be provided such that in the case of voltage rising above acceptable cell voltage limits (2.4 V/cell for lead/acid), it should disconnect the output of the charger.

Alarms recommended are:-

- A.C. Mains failure to the charger
- No Output
- High Output Volts
- Fuse Blown
- High Temperature

3.3 Battery - This is the heart of the system. Without a reliable battery bank an Uninterruptable Power Supply will fail when called upon to operate in anger, thus, extreme care should be exercised when selecting and maintaining a battery bank.

(a) Battery Capacity - A battery should be capable of supplying full load conditions for a period of 60 minutes before any cell in the bank falls to what is considered an exhausted level. (For a lead-acid cell it is considered to be exhausted when its voltage falls to 1.7 V/cell.) The battery capacity should not decrease after three test discharges of full rated load.

(b) Cell Type (Lead/acid) - The cells of pasted-plate, lead-acid type should be formed in transparent plastic cases and conform to the latest A.P.O. Specification No. 662 "Batteries, Secondary, Stationary, Pasted Plate, Fully Enclosed Type and Accessories".

3.0 DETAILED PARAMETERS (Ctd)

3.3 Battery (Ctd)

(c) Operating Conditions - It is not normal practice to cycle batteries with regular discharge and charges. However, a battery may have a capacity test carried out during the life of the battery if its condition is doubtful - this should not affect the life of the cells.

(d) Accessories - When purchasing batteries, accessories such as stands, interconnecting bolts etc. may also be obtained from the manufacturer.

(i) Stands - If tiered stands are offered, they should allow easy access for maintenance and removal of all cells and be manufactured from a non-conducting material covered with an acid resistant coat.

(ii) Connection Accessories - Lead covered nuts and bolts are required for all interconnection. However, it is far more reliable to lead burn (weld) cell posts together providing an integral connection between cells.

(iii) Fuses - Battery outputs should be fused in order to safeguard against D.C. bus faults.

(e) Battery Room - As cells produce hydrogen during the charging process, it is of extreme importance that a battery room be free of any item that may cause ignition of the hydrogen or be vented in such a manner to reduce the concentration of hydrogen below its possible explosive mixture. The Australian Standard A.S. 2676 provides information for the design of battery rooms.

3.4 By-Pass Line Conditioner - This is to provide a short term back-up supply for the system during maintenance or failure of the inverter system.

(a) Rating - The By-pass Line Conditioner should be capable of supplying full load for 0.8 lagging to unity power factor.

(b) Input Voltage - Nominal domestic network supply with voltage variation of ±20% from nominal.

(c) Output Voltage - This should be regulated to within ±5% for all environmental and load conditions within its range.

(d) Frequency - The conditioner should be able to function with a frequency variation of ±5%.

(e) Harmonic Distortion - The output should be a sine wave with a total R.M.S. harmonic content less than 5% with the R.M.S. value of any single harmonic less than 3% under any combination of environmental or load conditions within its range.

3.0 DETAILED PARAMETERS (Ctd)

3.4 By-Pass Line Conditioner (Ctd)

(f) Overload - The conditioner should sustain a 100% overload for 10 seconds simultaneously maintaining output voltage with specified limits, for all environmental conditions and input voltages within its range. If the overload continues for more than 10 seconds, the conditioner should trip within a period as to ensure no damage is caused to itself.

(g) Transient Response - For a load change from 0% to 100% of the rated output, the output voltage should not vary by more than 15%, recovering to within ±5% of the adjusted output voltage within a period of one cycle and should be within a specified tolerance of ±3% within three cycles.

For a sudden change in load from 0% to 50% of the rated output, the line conditioner output voltage should not vary by more than 10% of its adjusted output voltage.

(h) Earthing and Isolation - The conditioner should be capable of operating with the neutral locally earthed or floating.

(i) Efficiency - The full load efficiency should be greater than 90% within nominal input voltage (range).

(j) Noise Rejection - The line conditioner should provide attentuation of transients on the input A.C. The common mode rejection should be greater than 60 dB and the transverse mode rejection greater than 50 dB for any noise signal above 100 kHz.

3.5 Static Switch - This item of plant uses thyristor switching to change-over from inverter to by-pass supply and vice versa when both are in synchronism such that the load sees no break of supply.

(a) Rating - The static switch should be able to carry the full rated output of the by-pass supply. It should also be capable of carrying a 25% overload for 1 minute from the inverter and a 100% overload for 10 seconds from the by-pass supply.

(b) Protection - The switch should be protected against a short circuit placed on its output terminals.

(c) Transfer Initiation and Time - Transfer should initiate with:-

- Inverter failure
- Overcurrent
- Undervoltage
- Manual change-over.

The overcurrent detection point should be continuously adjustable to 200% of full rated output and the under-voltage be adjustable between 0% and 90% of nominal. Transfer time should be sufficiently short to ensure minimal transients in the voltage waveform. At no time during the transition should the instantaneous output voltage fall below 30% of the nominal.

3.0 DETAILED PARAMETERS (Ctd)

3.6 Switchboard - The switchboard carries out all A.C. and D.C. switching and distribution functions not performed by the actual U.P.S. Modules.

(a) Layout - A switchboard should have a mimic diagram of the complete U.P.S. system indicating functions performed by U.P.S. modules passively and with its own push buttons, controls, switches and metering in their relevant positions on the diagram. It should have adequate access for cabling, terminations and be designed such that access to all equipment mounted in or on the board is available at all times with the board in service.

(b) Rating - D.C.: The board should be rated at 200% of inverter input current at full load with battery cell voltage depleted (lead-acid 1.7 V/cell). Double pole switching should be used on all the D.C. system.

- A.C.: The breakers should be rated for a prospective fault level of 6 kA R.M.S. and for breakers over 100 A, a fault level of greater than 6 kA R.M.S.

(c) Protection - The switchboard should be constructed as follows:-

(i) Prospective fault level of 20 kA R.M.S.

(ii) Segregation should be form 3.

(iii) Degree of Protection IP54.

4.0 USER PROBLEMS AND PITFALLS

There is a high probability that the author of the specification used to describe the parameters for the U.P.S. system is not the user, though consultation between the two usually occurs at some level depending on the organisation. Hence, at the end point when the equipment is delivered and commissioned, problems arise which could have been solved if both designer and user worked together in forming the specification, analysing tenders and installing the final product. Many problems can be solved before the equipment is commissioned if designer and user talk to one another.

However, some problems will still arise due to oversight, financial and technological constraints. In this section, some of the problems found will be outlined as an aid to others to help their U.P.S. systems towards the ultimate goal, a "High Reliability Power Supply", the true U.P.S.

4.1 Battery

A number of problems have been experienced with the manufacturer's assembly, construction and installation of lead-acid cells.

(i) In the construction of a lead-acid cell, a glass wool separation mat is used with a polymer separator to provide insulation between the positive and negative plates. In a few cases, this mat has not been aligned correctly between the plates.

4.0 USER PROBLEMS AND PITFALLS (Ctd)

4.1 Battery (Ctd)

(ii) Some of the element plates showed visual voids and inconsistent thickness through the plate.

(iii) Seals between the plastic resin (styrene-acrylonitrile) cell top and plate posts have allowed vapour to pass and settle on the top around the post exits.

(iv) Adhesion between the plastic cell top and body in a few cases has not been complete.

(v) Swarf has been found in the bottom of the cell from manufacture.

(vi) The method of interconnecting cell posts using lead plated bolts can result in loose connections or after a period corrosion between the post surfaces in contact. It is far more satisfactory to lead burn the posts together with 5 - 6% antimonial lead rod. Posts on cells are designed for lead burning. See Appendix B.

(vii) Use distilled water only - contaminated water, if used for topping up, will reduce the life and rating of cells.

4.2 Battery Charger

Problems experienced with modern solid state chargers have been few. They are:-

(i) Printed circuit board plugs - misalignment and poor quality female contacts have resulted in intermittent and complete failure of chargers. Printed circuit boards with locking facilities and plugs of good quality will prevent poor connections and vibration moving the board out of its holder.

(ii) Vermin ingress - Rodent and small animal ingress into chargers has caused damage to control cards - again resulted in charger failure. Charger cabinets must be completely vermin-proof with screening across air inlets and cable gland plates.

4.3 Inverter

Those problems experienced with 4.2 above apply also to the inverter. The only other problem experienced has been with the method of holding synchronisation with the system. This however was quickly overcome with the manufacturer providing a new design and printed circuit boards were exchanged.

4.0 USER PROBLEMS AND PITFALLS (Ctd)

4.4 Static Switch

Again, problems experienced with 4.2 apply. The static switch itself has performed without problem although it was found the manual by-pass switch was incorrectly connected, resulting in a break-before-make situation.

4.5 Switchboard

The switchboard has provided a few concerns:-

(i) Combined fuse switches were under-rated from design and will not meet some full load requirements. Redesign and the installation of circuit breakers was used to solve the problem using the existing switchboard combined fuse switch space.

(ii) Lack of complete mimic representation - the board's function was not fully represented on the mimic - additions to the mimic were required.

5.0 GENERAL

The equipment not covered in 4.1 to 4.5 to date has not failed nor indicated any particular problems. The following concerns are general and do not only encompass a U.P.S. system, but can be equally applied to any system or installation.

(i) Manuals - Adequate manuals on equipment showing operating instructions and detailed construction and circuitry for commissioning, operation, maintenance and repair are a necessity. You cannot adequately provide a reliable U.P.S. system without detailed knowledge of its components, operation and design. When equipment is delivered, detailed manuals must be available for installation and commissioning.

(ii) Spares - Spare components need to be obtained and kept as non-availability of or extended delivery date of a component is a reality with the financial restrictions placed upon companies in today's climate. With solid state equipment especially integrated circuitry, components may be unobtainable in the next decade. Specialised components such as high speed switching thyristors may only be obtainable from one world manufacturer and a delivery time may be measured in months.

It is therefore essential that spares such as specialised solid state components, control cards and fuses which are usually recommended by the manufacturer are kept.

(iii) Environment - The U.P.S. system should be treated with the same care as the load it supplies. The U.P.S. should be located in a room which is dust, vermin and waterproof. It must have adequate ventilation and cooling to ensure that temperatures experienced by the U.P.S. system are within its design capabilities.

5.0 GENERAL (Ctd)

(iv) Personnel - The personnel who operate and maintain the system must be fully trained in its operation and fundamental design. Maintenance personnel need further detailed training in the system's design and component make up.

Adequate diagnostic equipment must be available for personnel to fault find and maintain the U.P.S. system.

6.0 CONCLUSION

A highly reliable Uninterruptable Power Supply system can be achieved if the initial parameters are accurately set and both designer and user consult in the formation of the specification and that the specification is technically possible within the parameters given. Tenders are analysed by designer and user.

The quality control provided by the manufacturer is adequate and is monitored by the purchaser. When equipment is delivered at site, all manuals are available and have been agreed to by both manufacturer, designer and user.

The installation is monitored by the purchaser and manufacturer and commissioning is a joint venture between manufacturer and purchaser.

The manufacturer undertakes with the purchaser training of personnel in the operation and maintenance of the U.P.S. system.

The purchaser obtains adequate spares as recommended by the manufacturer and his own trained maintenance personnel.

If this criteria is used, then your U.P.S. will meet the standards required in reliability and performance in supplying your equipment.

Attach.

REFERENCES

Storage Batteries - George Wood Vinal Sc D. ISBN 471 90816.9.

Batteries and Energy Systems - C.L. Mantell Ph. D ISBN 0-07-040031-8

Australian Standards:

AS-2676 - Batteries in buildings, installation and maintenance.
AS-2191 - Stationery, lead-acid Planté positive plate.
AS-1981 - Stationary, lead-acid pasted plate type.
AS-2668 - Water for Batteries.
AS-1560 - Design and use of components intended for printed circuit board mounting.
AS-1522 - Metal Clad Base materials for printed circuit boards.
AS-1930 - Circuit Breakers for distribution circuits.
AS-1211 - Reliability of electronic equipment and components Parts 1 and 2.
AS-1939 - Degrees of protection provided by enclosures for electrical equipment.
AS-1136 - Switchgear and control gear assemblies up to 1 000 V.
AS-3000 - S.A.A. Wiring Rules, Part I.

Theory of Static Converter Systems - Michael A. Slonim ISBN 0-444-42255-2 (Vol. 10)

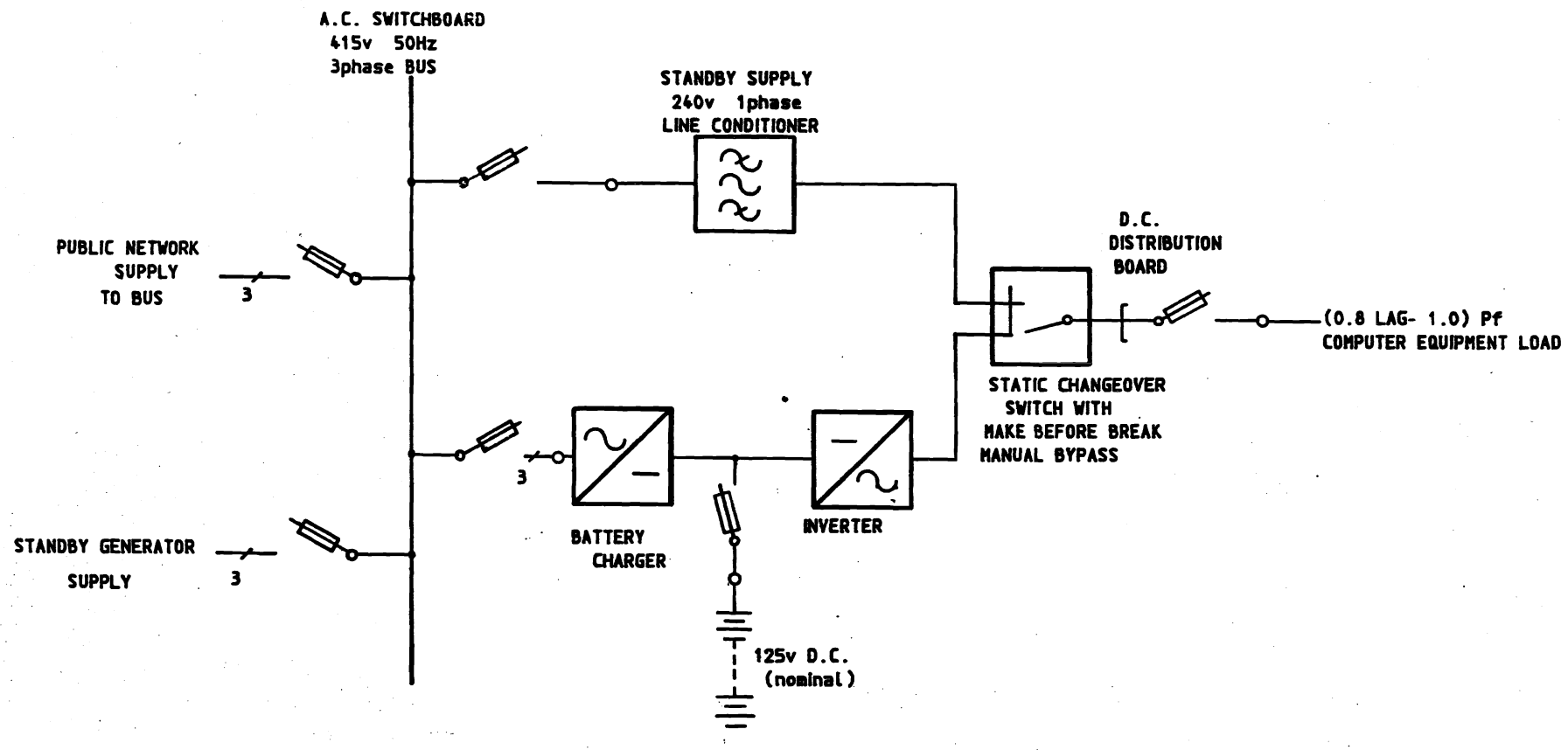

FIGURE 1
BASIC UNINTERRUPTIBLE POWER SUPPLY (UPS)

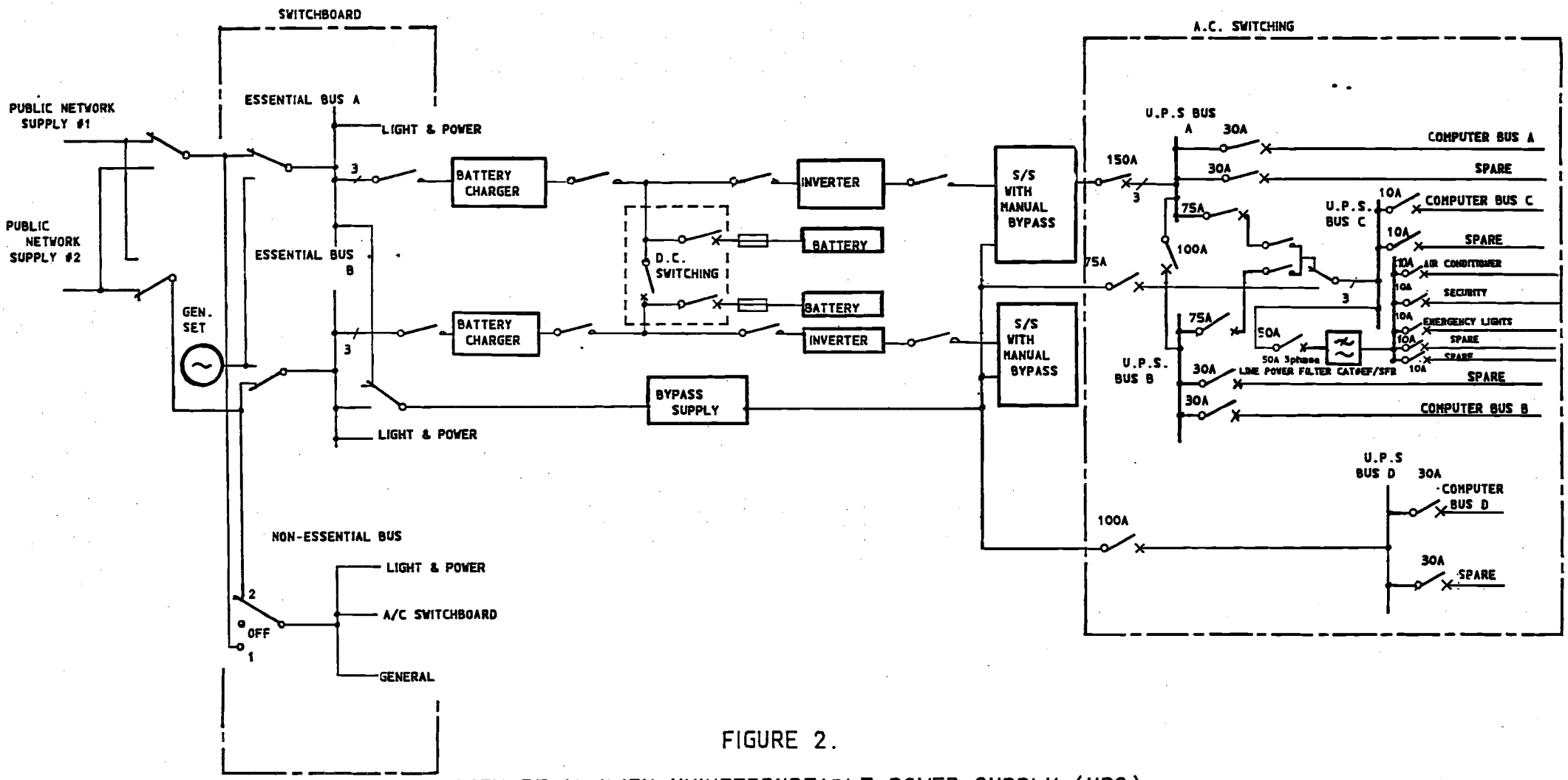

FIGURE 2.

HIGH RELIABILITY UNINTERRUPTABLE POWER SUPPLY (UPS)

APPENDIX A

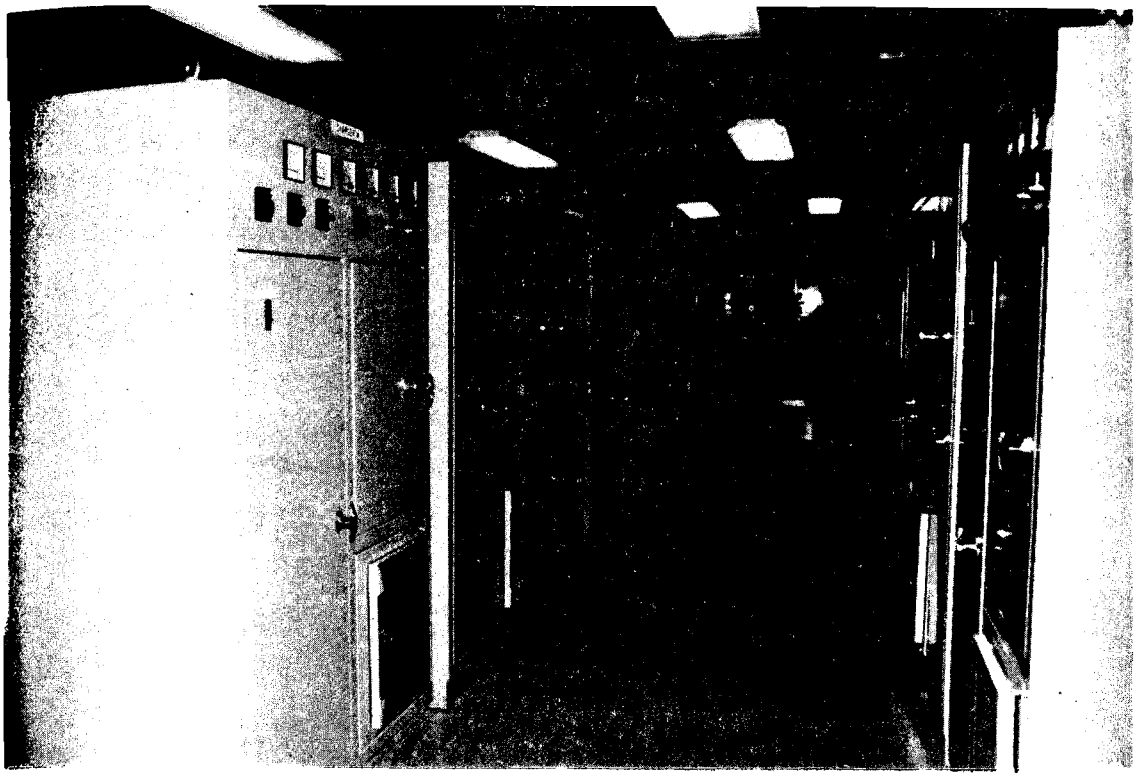

VIEW OF U.P.S. ROOM

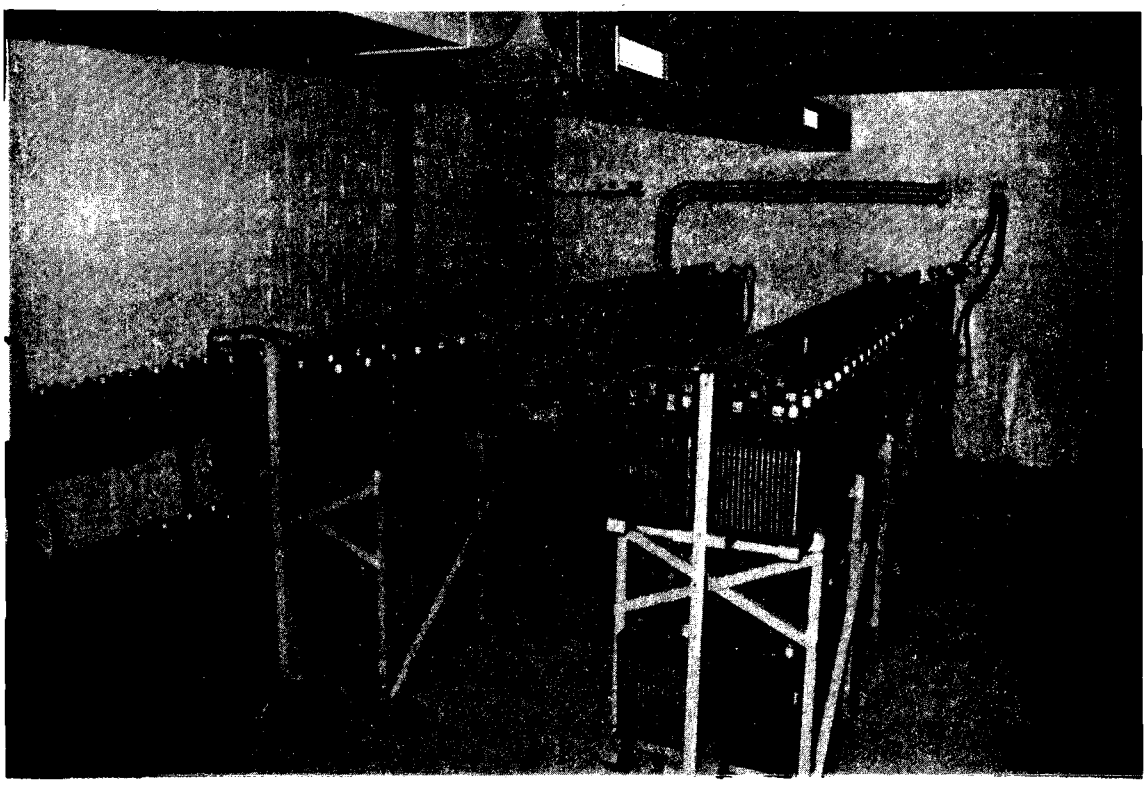

VIEW OF BATTERY ROOM

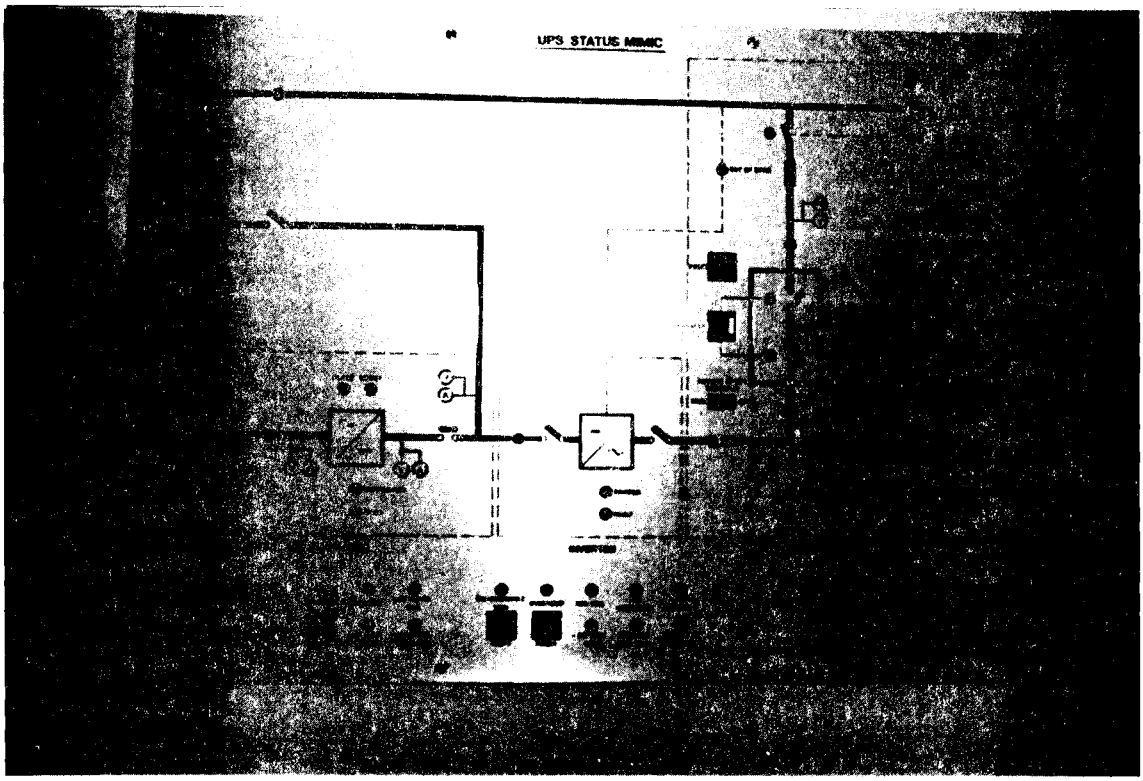

MIMIC DIAGRAM OF U.P.S. SYSTEM

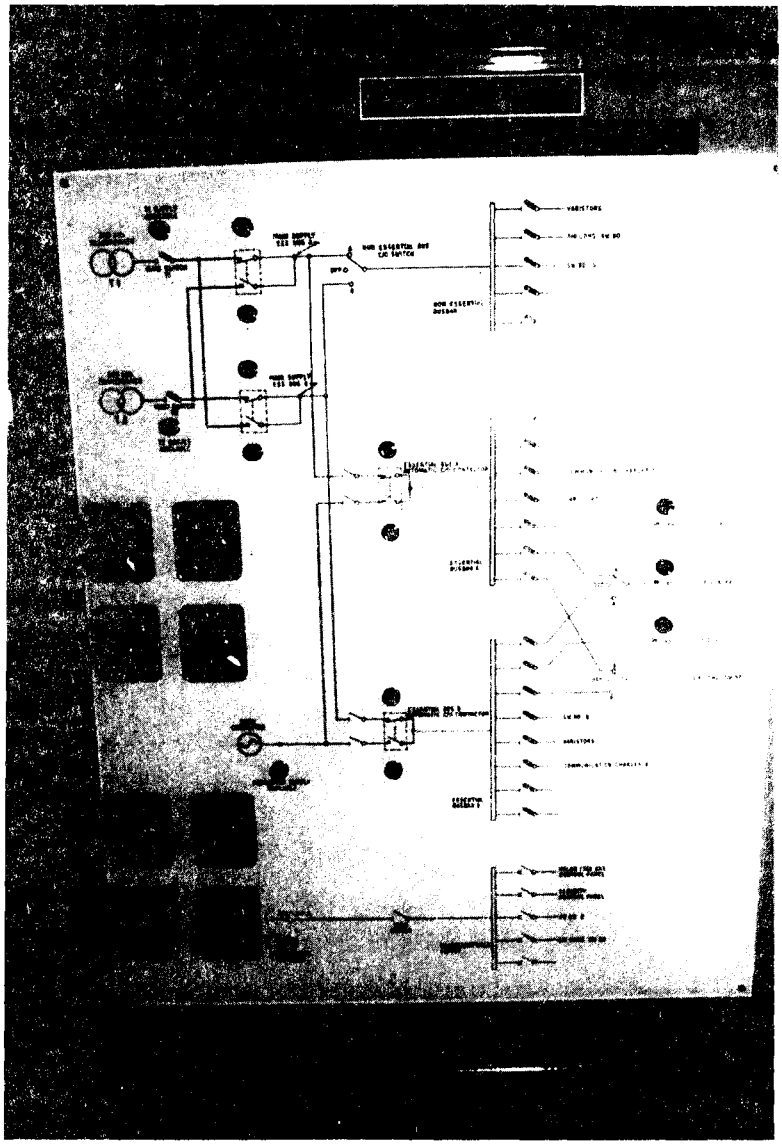

MAIN SWITCHBOARD MIMIC

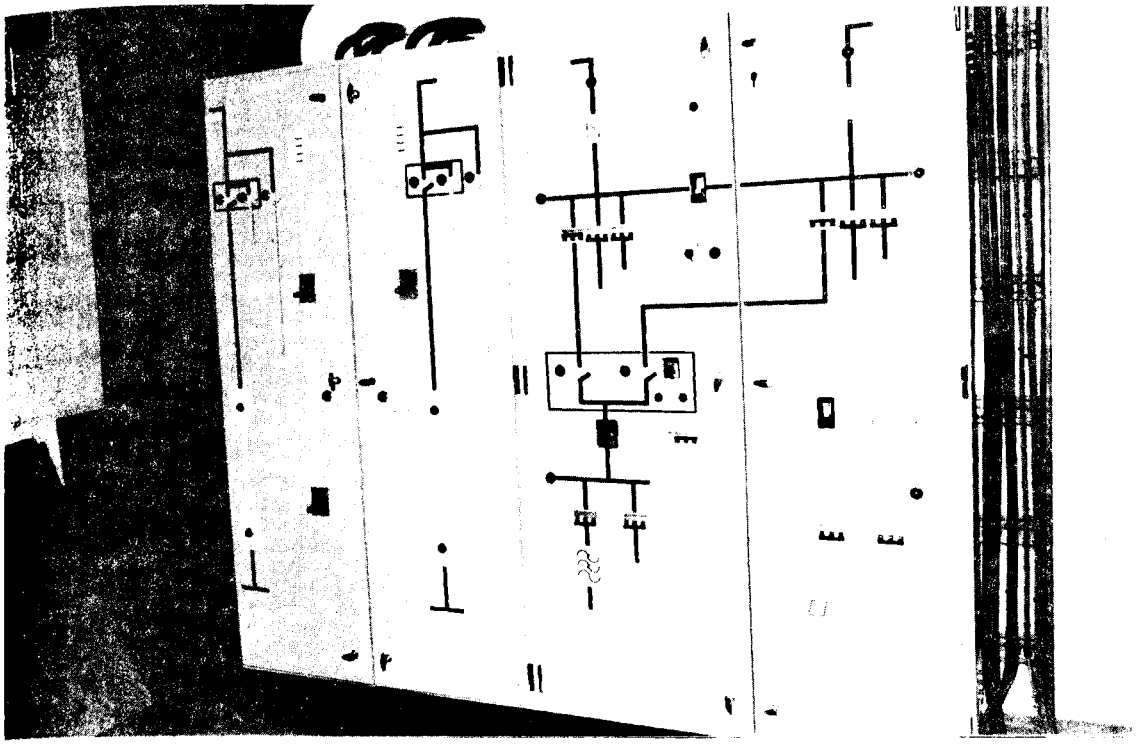

U.P.S. DC/AC SWITCHBOARD WITH MIMIC

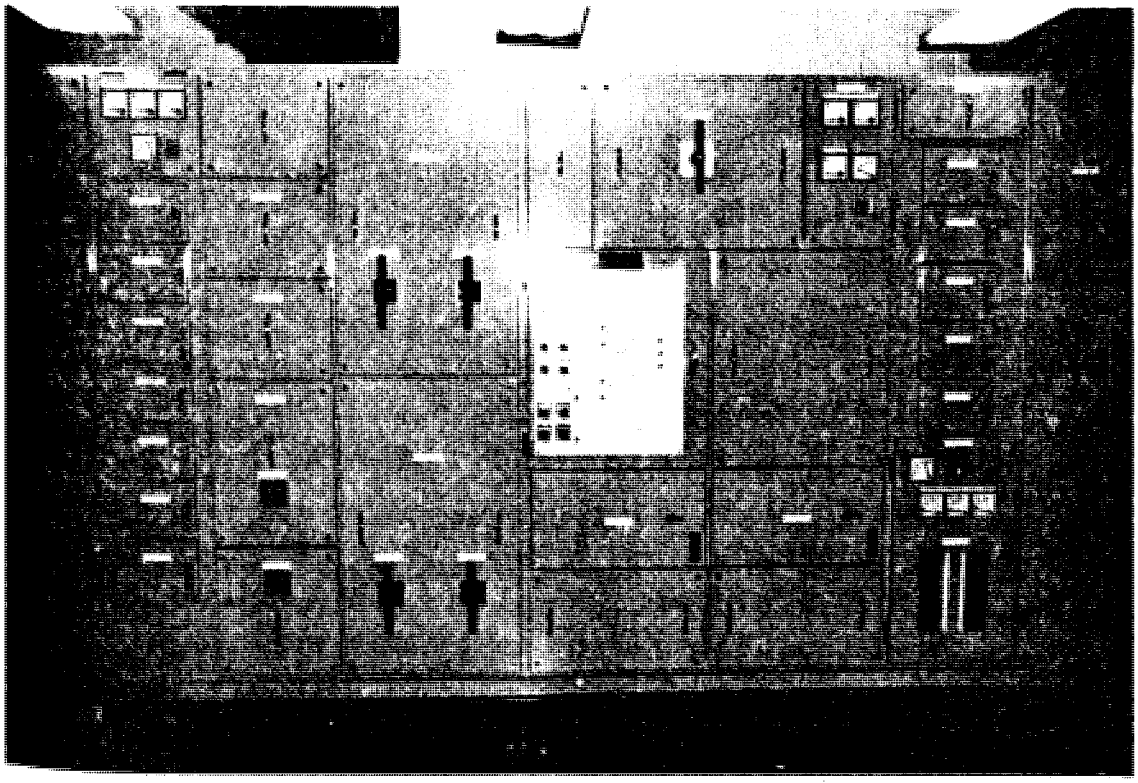

MAIN SWITCHBOARD

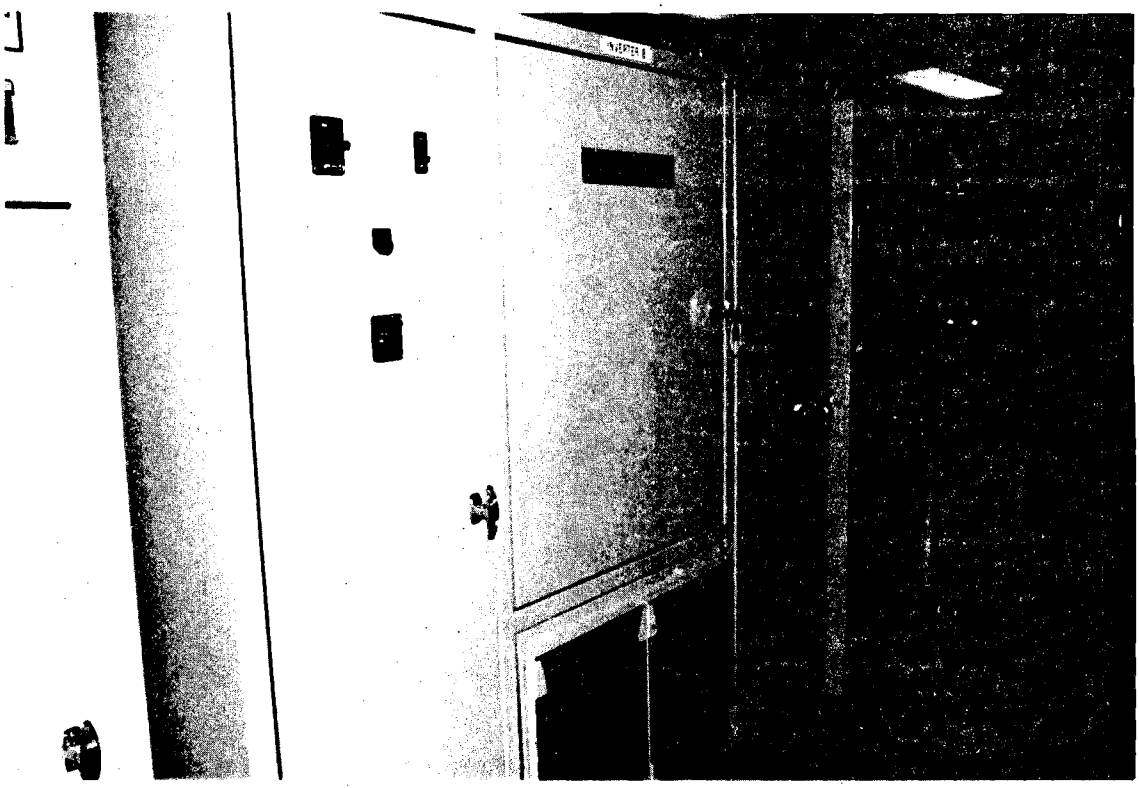

INVERTER:

Input: 210 to 280 volts DC

Output: 240/415 volts AC, 3 phase, 4 wire, 50 Hz, 75 kVA at 0.8 p.f.

Firing Delay Time "t": 56 microseconds

Maximum Modulation Index: 81%

Current Limit: 104 A

With: DC undervoltage trip, synchronizer with Sync Disconnect for line reference beyond 49.6 - 50.4 Hz range.

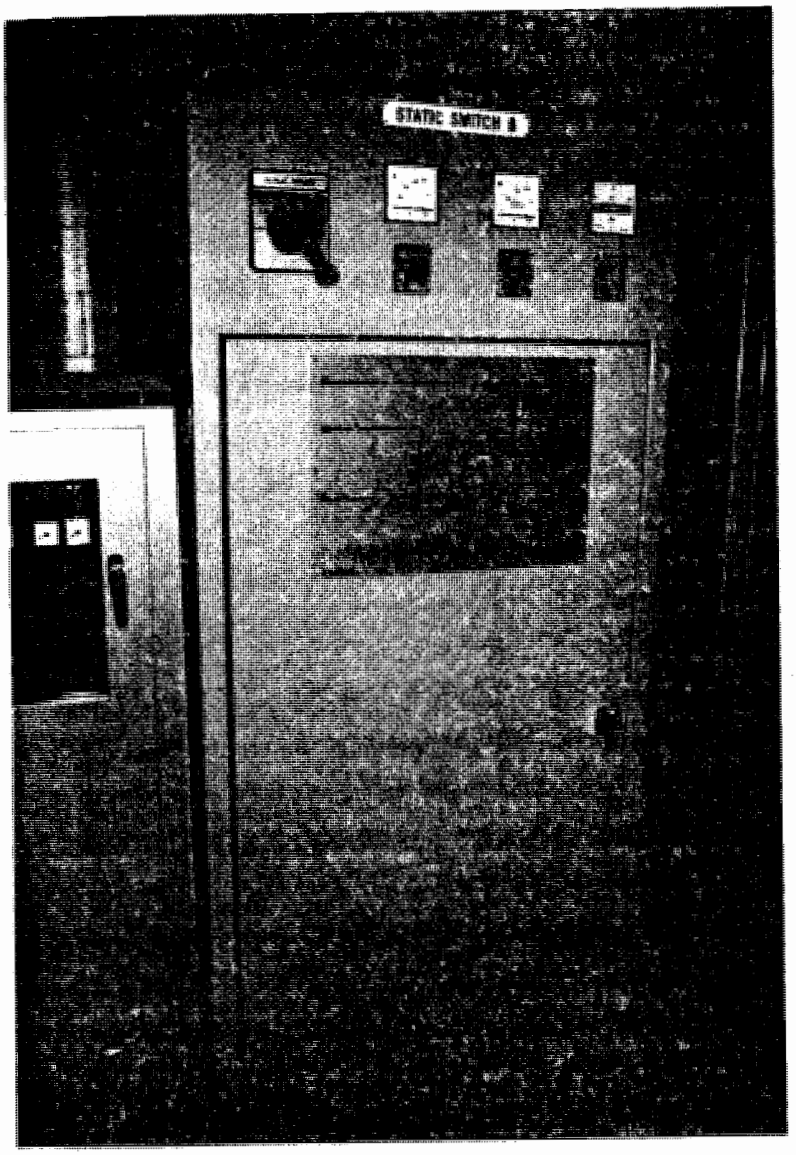

STATIC SWITCH

Preferred Source:	Inverter
Alternate Source:	240/415 volt, 3 phase, 4 wire, 50 Hz, AC line.
With:	Manual Bypass Switch, continuity monitor, auto-manual return switch.

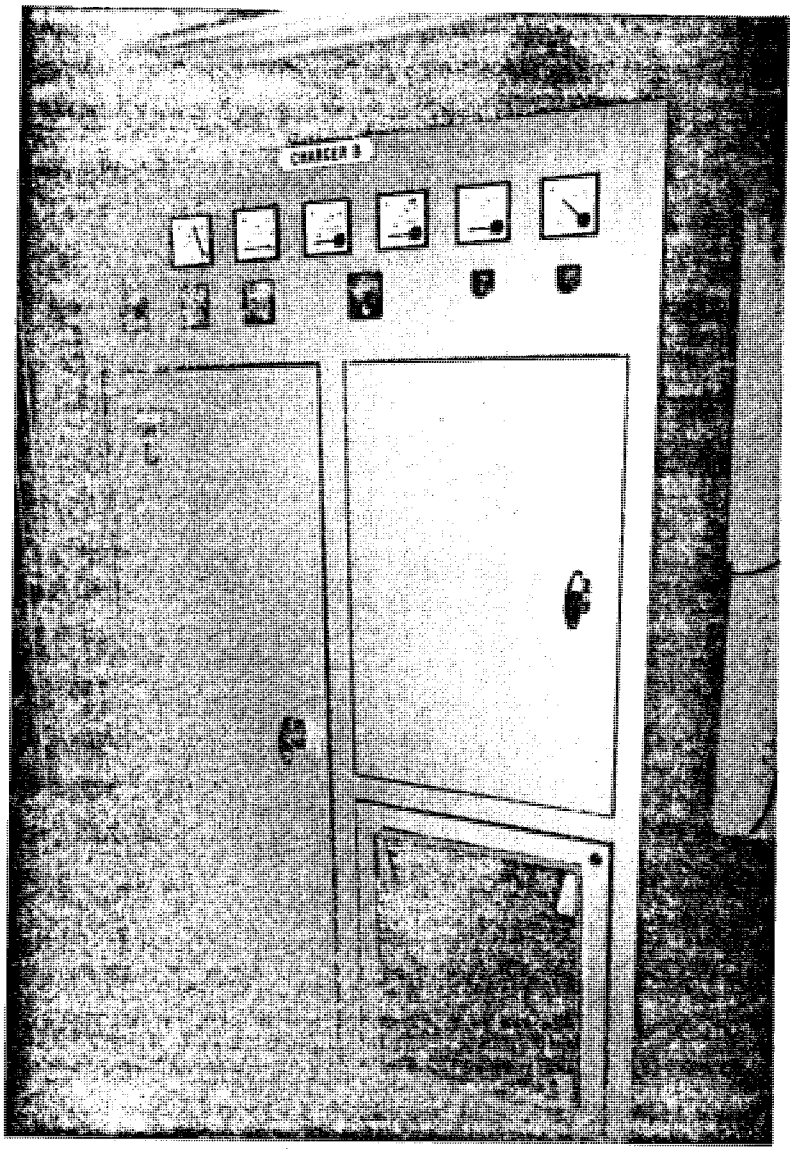

REGULATED RECTIFIER (BATTERY CHARGER)

Input: 380 volts AC ±10%, 3 phase, 3 wire, 50 Hz.

Output: 250 to 280 volts DC regulated, 350 amp.

DC Voltage Settings: 270 volts float, 280 volts equalize.

Ambient Temperature: 0 to 40°C.

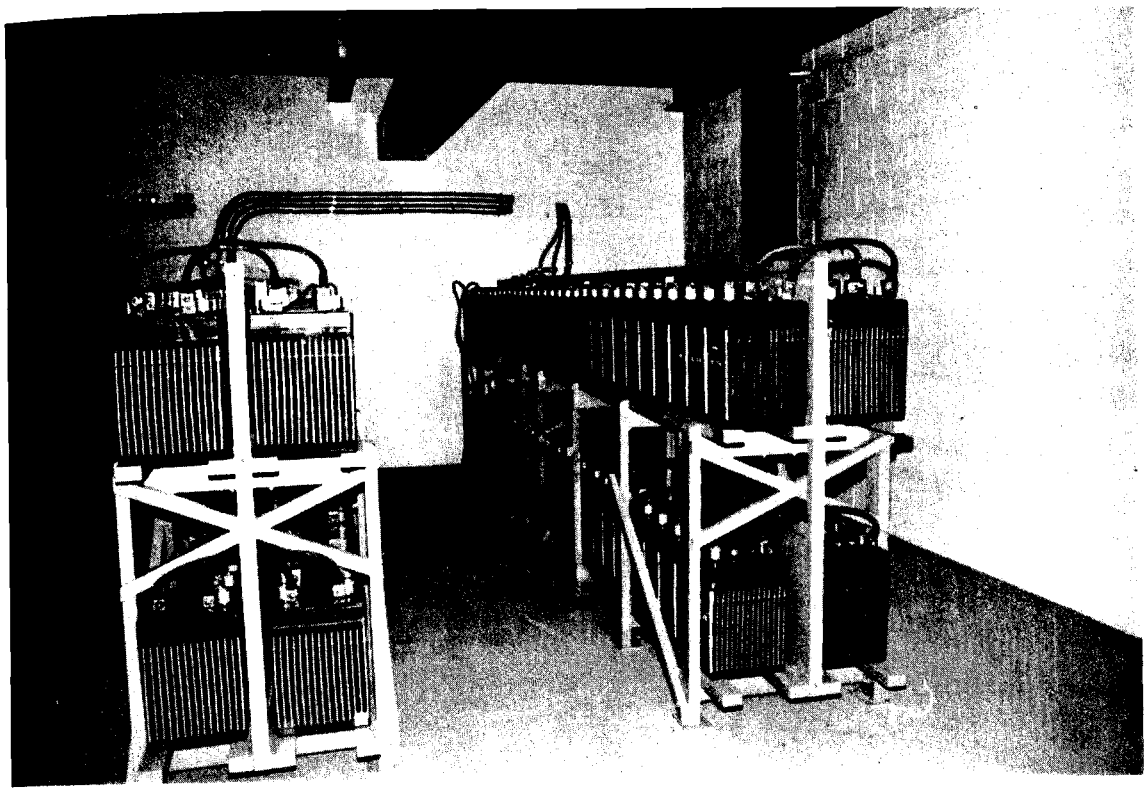

BATTERY BANKS

Cell: 2V, 690 Amp hr.

Bank: 2 off, 120 cells

Float Voltage: 265 to 270 V
(2.2 - 2.25 V/cell)

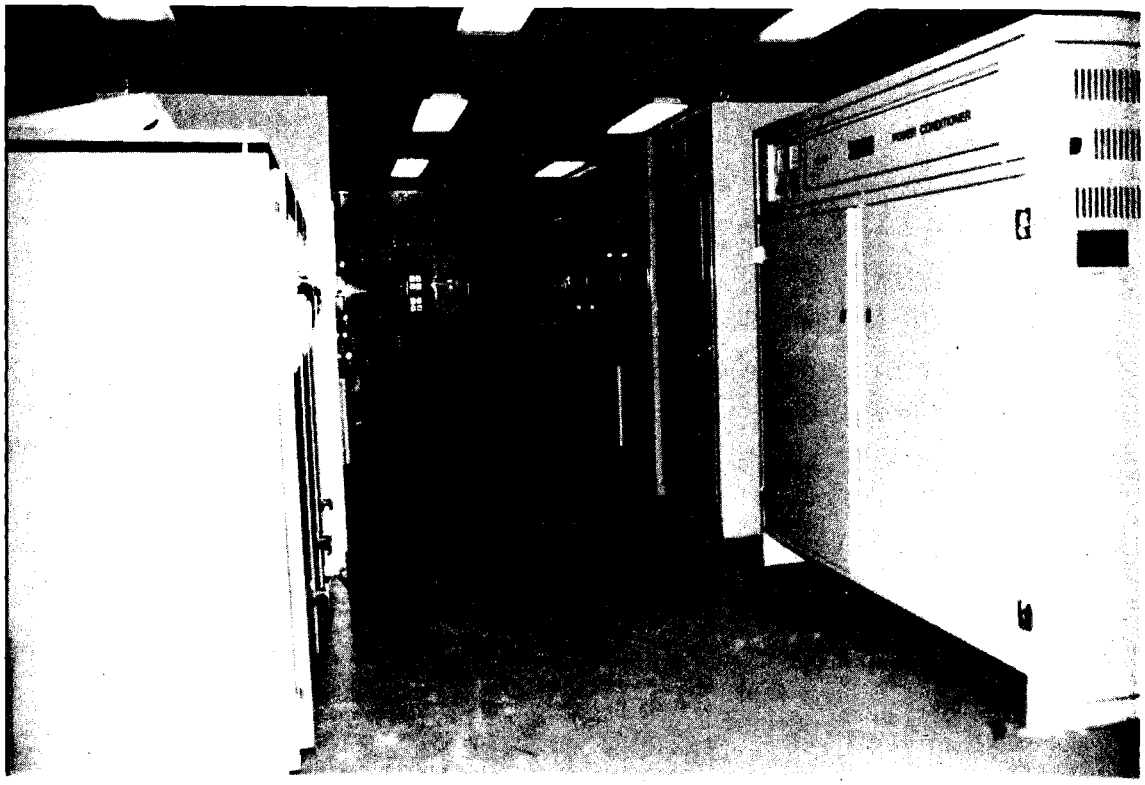

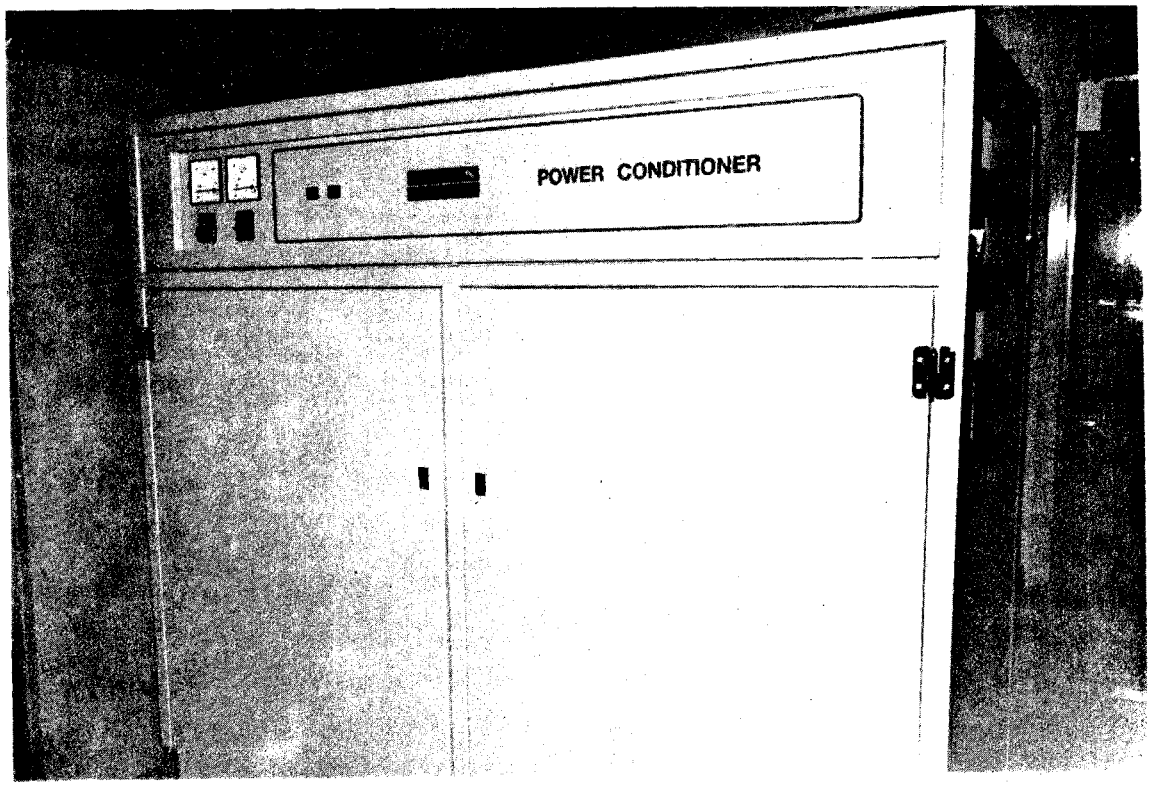

BY-PASS FILTER (POWER CONDITIONER)

Input: 415V AC, 3 phase, 4 wire, 100 kVA.

Output: 415/240 volts A.C., 140 Amp.

Max. Temp. Rise: 125°C

Standard: AS2374

APPENDIX B

1. INTRODUCTION

To obtain high reliability and performance from battery banks, they must be installed correctly. Most of the problems encountered are caused by lead connections, which result from incorrect lead burning of terminals or no lead burning of terminals at all. Soldering terminals together is not acceptable - under no circumstances should terminals be soldered or solder used to assist the lead burning process. Under working conditions, the tin in the solder oxidizes and forms high resistance joints.

2. BATTERY HANDLING

The cells normally come from the manufacturer in wooden crates, filled with acid (wet), charged and gas cap safety vents sealed. Unpacking should be done either in the battery room or a place geared to handle accidental acid spillage.

Batteries should be handled with extreme care and be kept upright at all times. NEVER LIFT CELLS BY TERMINAL LUGS. In the case of larger heavier cells, where slings are necessary for lifting, a load spreader should be used to remove stress on case side walls and lid.

During unpacking, it is important to check each cell for correct acid level, cracks in case, terminal and plate damage. To prevent contamination of cells, vent seals must be left in place during installation.

Prior to positioning on shelves, cases should be neutralised by wiping first with bicarbonate of soda solution (50 grams per 5 litres of water) and then with fresh water. Wipe case dry with clean cloth. The batteries are now ready to place on shelves or in cabinet.

The two end cells are placed in their permanent positions at the end of the top shelf, and a gap of approximately 100 mm is left between these cells and the next two adjacent ones as shown in Figure 1. This gap allows room for filing and brushing prior to making the joint.

The remainder of the cells are positioned so that abutting terminals are of opposite polarity.

3. "BURNING" THE BATTERY TERMINALS

3.1 General

To obtain a successful battery installation which has a good mechanical and electrical bond between the lug faces which will not deteriorate when put into service. It is important that thorough preparation be made before actually "burning" the battery lugs.

It is preferable to install the top level batteries in the cabinet first, to minimise accidental damage to cell cases below (caused by falling tools or hot lead).

3.2 Preparing the Lugs for Joining

Care should be taken to avoid visible cracks between lugs as this can allow ingress of moisture and foreign matter into the joint which can lead to local corrosion between the lug faces.

Starting from the end with the 100 mm gap, the abutting and 'V' section surfaces are cleaned and squared with a dreadnought file and wire brush and the second cell is then butted up to the first. The 100 mm gap should give sufficient working room for filing and brushing. To obtain even, neat, well aligned joints, some extra filing and slight bending of terminals may be necessary. (To achieve bending, the lugs may be carefully tapped with a piece of wood.)

Figure 2 shows a set of well prepared terminals. When butted together, there should be a gap of at least 3 mm between case tops in the same row and a minimum of 25 mm between cases of adjacent rows. The cells should be kept in a straight line by using an insulated straight edge or string line. The lead burning process should take place as soon as possible after the terminals have been prepared to prevent poor quality joints being caused by oxidation or contamination.

It should be emphasised that absolute cleanliness in any welding process is essential if a strong homogeneous weld is to result between parent plates. Excess lead oxide, water, oil or acid in the burning groove will result in a poor mechanical bond and gaseous inclusions in the weld metal.

The lugs should be cleaned and burnt as work progresses down the line of cells. Bolts should not be necessary in normal service, however where high currents are anticipated or where severe mechanical vibration is likely, bolts may be used on the burnt connection. In such cases, care should be taken not to overtighten the bolts, and bolt holes and bolts should be liberally coated with vaseline to exclude air pockets to reduce the possibility of corrosion.

3.3 Protection of the Cell During Burning

To protect the cell from heat and/or mechanical damage during the burning operation, damp cotton waste can be placed over the top of the two cells to be connected together. A heat shield made from masonite or similar material can also be used to protect the cell tops.

WARNING Never attempt the burning in process if:-

(i) Batteries are in service.

(ii) Batteries are on charge.

(iii) Batteries have been on charge recently.

(iv) Vent caps are removed.

3.3 Protection of the Cell During Burning (Ctd)

In the case where batteries have been on charge, they should be taken out of service for at least 24 hours, during which time the cells should be frequently tapped on the sides to aid the release of any trapped hydrogen.

If lead burning is to occur on one bank of batteries in a room where another bank is in service, care should be taken to ensure that adequate ventilation is provided.

NOTE: Some modern cells use a plate separator material and method that tends to trap hydrogen more readily. A successful way to expel this gas is to tilt the cell sideways, giving support to the underside with one hand and tapping the upper side with the other. The batteries are safe to work on when, after several tappings, no more bubbles are seen to rise.

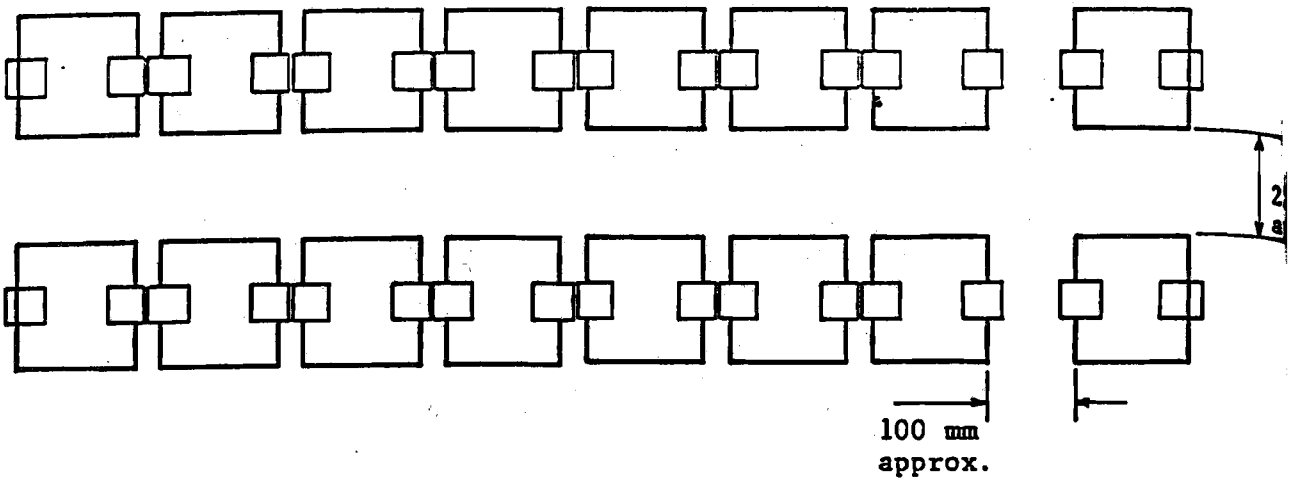

FIGURE 1 - PLAN VIEW OF INITIAL CELL LAYOUT

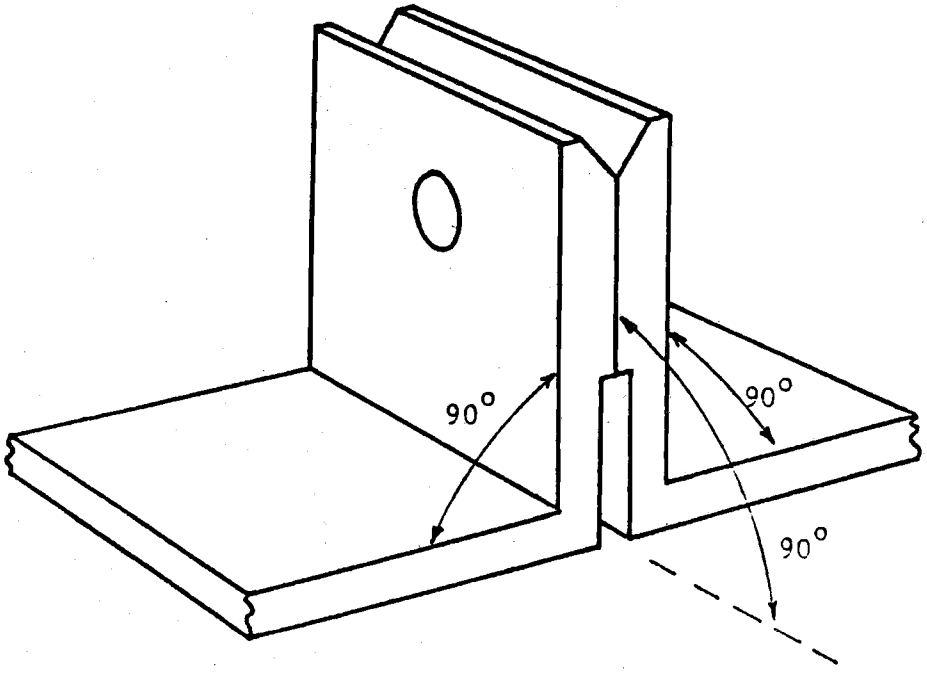

FIGURE 2 - CORRECTLY PREPARED TERMINALS

RECTIFIERS AND INVERTERS - THEORY AND PRACTICE

Mr S Finn

Gayrad Pty Ltd, Brisbane

RECTIFIERS AND INVERTERS

THEORY AND PRACTICE

SHANE FINN B.ENG

POWER ELECTRONICS ENGINEER

GAYRAD PTY LTD BRISBANE

Rectifiers and Inverters
Theory and Practice

Author

Shane Finn is employed by Gayrad Pty Ltd of Brisbane in the position of Power Electronics Engineer. Gayrad is principally a transformer manufacturer, but in recent years is finding an increasing shift towards manufacture of Power Electronics equipment; specifically, rectifiers, battery chargers, power supplies, inverters and systems comprising these components. Graduating from the CIAE in 1984 with a Degree in Electrical Engineering, Shane has since been involved primarily in Power Electronics design, and is currently completing a Bachelor of Maths and Computing, including studies toward a Graduate Diploma in Management.

Introduction

Power Electronics is both one of the most challenging and misunderstood of all the electronics fields. With that statement I shall base this discussion on the challenges to be met in the design of Power Electronics equipment highlighting the deviations in the shift from theory to practice, and the common misconceptions which proliferate when consumers and industry deal with such equipment. We shall cover the operational characteristics of this equipment, but will not presume an extensive electrical knowledge, although an understanding of the electrical fundamentals are required.

Devices

Before discussions of the practical aspects of Power Electronics design and manufacture, we need to first understand the fundamental concepts of operation and to be familiar with the commonly used device characteristics. Power Electronics is almost universally concerned with the non-linear switching of devices; ie. devices that cannot respond in a linear fashion but can only operate (or are desired to operate) in one of several states (usually two) which include a fully ON state and a fully OFF state. Typical of such devices is the thyristor (or SCR) which when triggered into conduction, will continue conduction until the current through it is interrupted. The process by which it stays in conduction is termed regeneration, and may be described as an action by which some of the current flow through the device is used internally to replace the externally applied firing signal which initiated the conduction (Fig 1). Associated with the regenerative action are two characteristics which specify the requirements for the process of regeneration to begin and continue. The first of these requirements, the beginning phase, is termed latching, and is specified as the minimum current which has to flow before sufficient excess current is available to replace the firing signal; the latching current. This is typically of the order of several hundred mA. The second phase is termed holding, and is specified as the minimum current which will sustain regeneration (the holding current), and is typically several tens of mA.

Two other important specifications need explanation, and these are a consequence of the physical processes which occur in the semiconductor material during operation. Since most SCRs are fabricated as closely spaced layers of silicon, a capacitance exists between layers, which in practice serves to provide paths for undesired signals to the gate, or firing terminal, of the device. Due to this capacitance, and the capacitors low impedance to quickly changing signals, a maximum rate of rise of voltage across the device is stated for each type of SCR (Fig 2). If this rate of rise of voltage (dv/dt) is exceeded, the capacitance between the main terminals and gate allows substantial currents to flow into the gate which may cause triggering of the device, usually causing mal-operation of the equipment, and frequently destruction. Several methods are available to limit the rate of rise of voltage across the device; the one most frequently used being a system of capacitors and resistors (called a snubber) which absorb some of the energy causing the change in voltage, thereby slowing the rate of change. The energy caught in this process cannot easily be used elsewhere and is mostly lost as waste heat.

Another physical characteristic which should be appreciated is the time taken for conduction to spread across the semiconductor material. Contrary to first impressions, when conduction begins, only a very small area of the total semiconductor surface carries the conduction current (Fig 3). As time progresses, the area of conduction expands to include the entire surface of the material. During this initial phase when conduction is only over a small area, the portion carrying the current heats to very high temperatures and a hot spot is created. If the current flowing through this region increases to a large enough value, the hot spot may reach the melting point of the material, and the device is destroyed. Alternatively, if the current increases at a rate not exceeding the spread of the conduction area over the surface, the hot spot does not reach dangerous temperatures, and the device operates safely. The challenging aspects of Power Electronics can be appreciated more fully when it is considered that all this occurs in one millionth of a second. Despite the dramatisation, the problem can be overcome relatively simply by adding in series with the device, an inductor suitably dimensioned that the maximum rate of rise of current is below the critical value.

Of the hundreds of other devices currently in use, and the hundreds more being developed, we shall only consider the transistor. Everyone has seen at one time the small transistors found in electronic appliances, or the large types found in amplifiers or radios. The device we are considering here operates on the same fundmental principle, but its physical construction has been optimised for use in ON/OFF or switchmode applications. It offers no regenerative action, but must be driven continuously for the duration of conduction. Due to the differences in physical construction, it is much less robust than an SCR and requires careful observance of its many operating criteria for reliable use. An important concept required for an understanding of transistor operation in Power Electronic equipment is termed saturation, and is described as the state which occurs when the voltage drop across the device is a minimum and is achieved by applying excess drive signal (Fig 4). In comparison, transistors offer a potential for lower power loss, as the voltage drop when saturated is considerably lower than an SCR in conduction. Transistors do, however require significantly greater drive signals, and therefore suffer from a greater power loss in the drive circuitry. Due to the large currents needed to drive a transistor, it does not suffer from dv/dt problems, as any internal capacitance cannot supply sufficient current to falsely operate the device.

Rectifiers

As the first of two discussion topics, we will consider battery charging equipment. Most chargers, or to use the correct but misleading term rectifiers, use as their fundamental component a semiconductor bridge rectifier of one of the following forms (Fig 5).

Half controlled single phase bridge

A four component assembly comprising two diodes and two SCRs. Two electrically different configurations are possible, with either an input or output directly connected to both SCRs. The important electrical difference is to be found by looking for a diode path for a reverse voltage applied to the output. If such a path exists, then the bridge is of the second form, and in use may exhibit a trait described as half waving, where one SCR permanently conducts.

Half controlled three phase bridge

A six component assembly comprising three diodes and three SCRs. It is merely an extension of the single phase bridge, but has only one form.

Fully controlled single phase bridge

The assembly comprises four SCRs, but is rarely used for general use.

Fully controlled three phase bridge

Comprising six SCRs and once again rarely used.

We shall concentrate here on the half controlled single phase bridge. When used as a battery charger several other components are needed for satisfactory operation (Fig 6). In order to remove a fault path into the bridge should an SCR and diode fail, a series diode is added which prevents the battery from discharging through the bridge. To reduce the ripple currents flowing into the battery when heavily charging, an inductor is also added. Ripple current is a significant factor affecting the life of the battery, with ripple reduction improving the life of the battery. Required with the inductor is a flywheel diode which prevents the interuption of current through the inductor, thereby reducing the voltage stresses applied to the semiconductor elements. This factor in addition to the action of the series diode, frequently eliminates the need for snubbers, reducing the power losses within the circuit. An additional feature of the inductor is its inherent di/dt limiting which reduces the current stress placed upon the semiconductors.

Some of you may have noticed that no bleed load has been included across the bridge output. This is necessary from theory to ensure that the fired SCR latches on, ie. its latching current is exceeded. It is our experience that under the following conditions this load is not needed:

(a) The SCR firing signal is a pulse train of frequency >> 50Hz

(b) The filter choke is suitably dimensioned such that load current does not decay appreciably in one half cycle.

Under these conditions, the repetative firing of the SCR during the start of a conduction phase (Fig 7) is sufficient to establish a DC current flow through the inductor greater than the latching current of most SCRs. During the following OFF period before the next SCR is fired, this output current flows through the freewheel diode and decays but is still greater than the SCR latching current. When the next SCR is fired and the series diode is again forward biased, the current is forced through the SCR and it is latched. This does of course limit the minimum current output of the charger, but in practice the charger is rarely required to operate at such low currents. The elimination of both the bleed loads and snubbers improves significantly the efficiency of the charger, despite the added series diode losses. For those about to note that ommission of the snubbers increases RFI emmissions, the use of the series diode and adequate earthing practices reduces RFI to equivalent levels.

Continuing the discussion to areas of performance, it is opportune to consider several common requirements. It is commonly requested that a constant voltage charger restore a battery to 100% capacity in a given time (frequently 10 hours). As our colleagues from the battery industry will support, it is only possible to restore a battery to a large portion of its capacity (eg. 80%) in a such a time (Fig 8). To add the remaining 20% requires time periods of weeks,; an important point to note when dimensioning batteries for Remote Area Power Supply use where batteries are required to discharge overnight and recharge during the day.

Two other performance criteria frequently stated are minimum power factor and efficiency. To provide the basis for discussion, Power Electronics equipment is mostly concerned with the use of non-linear switching devices (ie. devices that are either ON or OFF). These devices cannot therefore respond with sinusoidal characteristics, but instead generate heavily distorted waveforms (Fig 9). It is these frequency components which make the imposition of power factor requirements inappropriate. Controlled rectification equipment cannot simply be assumed to be a 'black box' with specific constant characteristics. Its power factor is in fact linked to the firing delay of the SCRs and is constantly changing. While it can be measured or calculated, its restriction, effectively limiting the range of output voltage, does not allow for correct operation of this equipment. Understandably, the reason for minimum power factor limits is based in the concern for optimum use of mains distribution equipment, but this measure of performance is inappropriate.

The second major performance criteria is efficiency. While the measurement of output power is simple, measurement of the input power is difficult, if not impossible, due to the waveform distortion. As before, efficiency can be calculated from device losses etc., but usually results in an optimistically high value of dubious significance. Consequently, manufacturers are frequently posed with queries of equipment efficiency which are difficult to resolve, and unfortunately, it is these performance figures which are frequently used for equipment evaluation. While I have in the preceding discussion cast doubt on several performance criteria of battery chargers, I cannot offer alternative measures of performance on which to evaluate equipment, and therefore the problem remains.

Inverters

On to the second of the two discussion topics, inverters. Inverters can be classified as having one of two fundamental forms (Fig 10).

Centre tapped load inverter

A two component assembly in which the load is connected via a transformer with a centre tapped primary.

Bridge inverter

A four element assembly in which a single transformer primary is used.

We will confine the discussion to centre tapped load inverters. This configuration offers many advantages in application, not the least being the simple drive circuitry resulting from the common device connection, removing the need for isolated drive supplies. Once again, this configuration can be classified further into inherently commutated and force commutated groups. Commutation refers to the process of turning OFF the device. An SCR when latched requires the application of a reverse voltage to turn it OFF, termed forced commutation, where a non-regenerative device such as a transistor will turn OFF if its drive is removed. The following discussion is intended for transistor inverters, but is generally applicable to SCR inverters.

As in controlled rectification, theoretical design requires the addition of snubber circuits across each device to control the maximum transient voltage applied across each device. Transistors are much less forgiving of transient voltages and currents than SCRs, and therefore very definitely require snubbers to control the transients generated during switching. One aspect of inverter design frequently neglected are the energisation currents caused by many of the circuit components. Of these, the transformer is possibly the most important. Measurements of inrush current for a typical 500VA inverter transformer frequently exceed 1KA, and measurements taken on a 6.5KVA transformer yielded results in excess of 20KA. While the time scale of this inrush is only nano-seconds, an appreciation of the magnitudes of the impulse currents flowing leads to the need for reliable low resistance connections between circuit components, particularly snubber components. These connections include not only the terminations of components and cables, but also the cables themselves, with multistranded flexible cable offering better characteristics than single core solid cable due to the skin effect associated with high frequency currents. To highlight the significance of these connections, consider an impulse current of 300A flowing through a total resistance of 10mohm in the negative battery connection of an inverter (Fig 11). This current will generate a transient voltage of 3V between ground and the transistor emitter. If the drive signal ground was used as shown, this transient would be sufficient to drop the transistor out of saturation, and possibly causing destruction through excessive power dissipation.

While on the discussion of impulse currents, it is also important to consider that these currents can only be sourced from the battery supply. The comments made previously regarding battery ripple currents equally apply here, and for applications requiring continuous heavily loaded running of an inverter, it is frequently necessary to add an input filter to the inverter to buffer the battery from the inverter, so increasing the battery life.

Continuing from the practical aspects of design to the practical aspects of use, several factors must be considered. When dimensioning an inverter for a specific use it is relatively easy to determine the continuous running power of the appliance, but the transient power demands are frequently omitted. The point to be considered is that an inverter has a specific designed peak power capability, and exceeding this limit usually triggers protection circuitry which either limits the transient or stops the inverter. An inverter, unlike mains power, does not have a massive transient capability, but has very specific ratings which must be observed if reliable appliance operation is expected. The most vivid illustration of this is a refridgerator motor. Typically a split phase capacitor start motor, its starting current may exceed 10 times its running current. If an inverter is required to run a refridgerator, it must have a transient capability greater than the starting current of the motor. If this peak current is not delivered, the motor does not start.

Another common problem faced by manufacturers of inverter equipment for consumer use is a very real reluctance to using a battery voltage higher than 12V. A fundamental rule of inverter design is that use of a higher battery voltage results in a higher efficiency. A more explicit rule used in our manufacture is to limit the continuous current draw to 60A facilitating manufacture by preventing the use of large cabling, and allowing a satisfactory overload capability with the commercially available semiconductors.

Square Wave Inverters

Now to consider the pros and cons of square wave inverters versus sine wave inverters. Nearly all modern electrical and electronic appliances operate quite satisfactorily from a square wave inverter. Having made such a statement, it immediately requires qualification, in that satisfactory operation is an objective assessment made by the consumers who use our equipment. From our experience, only one appliance, an exhaust gas analyser, failed to operate when supplied from a square wave inverter. The range of other appliances which have been shown to operate quite happily from a square wave include lighting (incandescent and flourescent), heating, radios, television, video equipment, computers with hard discs, hi-fi equipment, and the list goes on. To offer a subjective comment, stationary equipment, ie. non-portable, tends to operate more consistently, possibly due to better quality internal power supplies. We have in fact been told that as a general cure for interference, use an extension cord longer than 3m between the inverter and appliance, due to the low pass filtering offered by the cable.

To backtrack a little to the discussion on transient capability, a problem which occasionally occurs with modern equipment incorporating Switch Mode Power Supplies, is the huge collective inrush current when large numbers of this type of power supply are energised simultaneously. This is considerably enhanced by the sharp leading edges in a square wave, and usually increases the already significant pulse currents caused by this type of power supply.

The most important determining factor of whether an electronic appliance will operate satisfactorily, is the average DC level of the rectified inverter output. If this level is equal to or greater than the average DC level of a rectified sine wave, the equipment power supply has sufficient voltage to enable its internal regulation to function. Another class of appliance, typified by flourescent tubes, is sensitive to the peak amplitude of the waveform. Provided the required peak voltage is reached, the tube will strike and conduction will continue. This type of appliance is usually not waveform sensistive. Provided that these conditions are met we have found no difficulty in obtaining satisfactory operation from the large majority of appliances.

Why then the preoccupation with sine wave inverters? Firstly, some manufacturers will not guarantee their equipment when used from non-mains power. Secondly, very few manufacturers know if their equipment will operate reliably on non-sinusoidal waveforms. Thirdly, operation from square wave sources usually causes equipment (particularly motors) to run hotter. Fourthly, sine waveforms are conceptually nicer.

Sine Wave Inverters

To complete the picture, lets discuss sine wave inverters. Again, there are two approaches; to add a resonant filter to a square wave inverter, or use one of the many high frequency wave form synthesis techniques and a minimal filter. Considering firstly the resonant filter (Fig 12), the major problem is one of frequency stability. A resonant filter, by definition, must resonate at the required output frequency, and attenuate any other undesired frequencies, and is usually comprised of two tuned circuits. For optimum performance, the inverter output must match exactly the resonant frequency of the filter, and additionally, each tuned component of the filter must resonate at the precisely the same frequency. Should any of the components of the system shift in its operational frequency, the system performance is significantly deteriorated, and the inverter efficiency will reduce.

It is this long term frequency stability which is difficult to achieve in practice, and in our experience, restricts this type of filter to relatively small power ratings (< 500VA). The major cause of system degradation is change in the filter inductive components, and may occur due to the ingress of moisture, temperature cycling or mechanical vibration. While the frequency drifts do pose a serious problem, the magnitude of the performance degradation is most significant when very low output distortion is required. If the distortion requirement is relaxed, the filter may be designed to be less sensitive to frequency shifts, and the usefulness of this approach increases.

The alternative methods of obtaining a sine wave output usually involve the use of a high frequency inverter whose output voltage is continuously being adjusted to closely follow the instantaneous voltage of the required sine wave (termed PWM - pulse width modulation) (Fig 13). This output is then passed through a quite small filter (in comparison to a resonant filter of the same power rating) to remove the high frequency noise superimposed upon the output waveform. Potentially, this approach offers the best performance, but is limited firstly by efficiency, and secondly by the significantly increased cost of the control electronics. The latter imposes severe price disadvantages for the general consumer, and the added performance can rarely justify the cost at ratings below 1KVA. At higher powers, the added costs of the control electronics becomes a much smaller proportion of the total cost, and this approach becomes cost effective.

To further appreciate the disadvantges of sine wave inverters, it is necessary to consider the effect of the filter upon the inverter. This filter in both cases is required to smooth the steep edges of the inverter output, and to supply the difference between the inverter output current that would have existed without the filter, and the sine wave current that flows in the load with the filter. As this difference current can only be supplied from the inverter, the inverter must carry not only the normal DC load current of a square wave inverter, but an AC current which is drawn by the filter as it smooths the inverter output and supplies the load current difference. The magnitude of this current is dependent upon the degree of filtering in a resonant filter, and the accuracy of the waveform synthesis in a PWM inverter. In a high quality resonant filter inverter, the AC current often equals the DC current, with the effect that large ripple currents must be supplied by the battery, consequently reducing its life. In a PWM inverter, the AC current is considerably smaller as the filter is neither resonant nor very large; while the magnitude of load current supplied by the filter is similar, the total time it must be supplied is smaller and the averaging effect of other components in the circuit reduce the magnitude the battery ripple.

One more important aspect of inverter use with appliances concerns the power factor of the appliance. Consumer appliances are usually stamped with the minimum power factor presented by the appliance when used with mains supply. When fed from an inverter, the output distortion usually causes the appliance to draw larger currents as further filtering has been effectively added to the inverter. Under these conditions, the appliance appears to have a lower power factor than it should, and care should be taken in ensuring that this added load can be supplied by the inverter. Additional complications arise when Power Electronics equipment is fed from an inverter, as such equipment invariably draws heavily impulsive currents. Such equipment usually does not have a stated power factor, but merely states a power consumption in watts. When such equipment is to be fed from an inverter, the inverter should be de-rated, recognising the arduous conditions Power Electronics equipment places upon its power supply.

Conclusion

In conclusion, there are many misunderstandings which exist concerning Power Electronics equipment, usually involving the peculiar operational characteristics which result from the use of non-linear devices. An understanding of the implications of these characteristics, from both an evaluation and application viewpoint, will firstly provide the consumer with educated expectations of equipment performance, and secondly lessen the difficulties which arise from improper use. Of necessity, the discussion has only verged upon the very fundamentals of Power Electronics theory and practice, but a useful background has been established for an association with rectifiers and inverters.

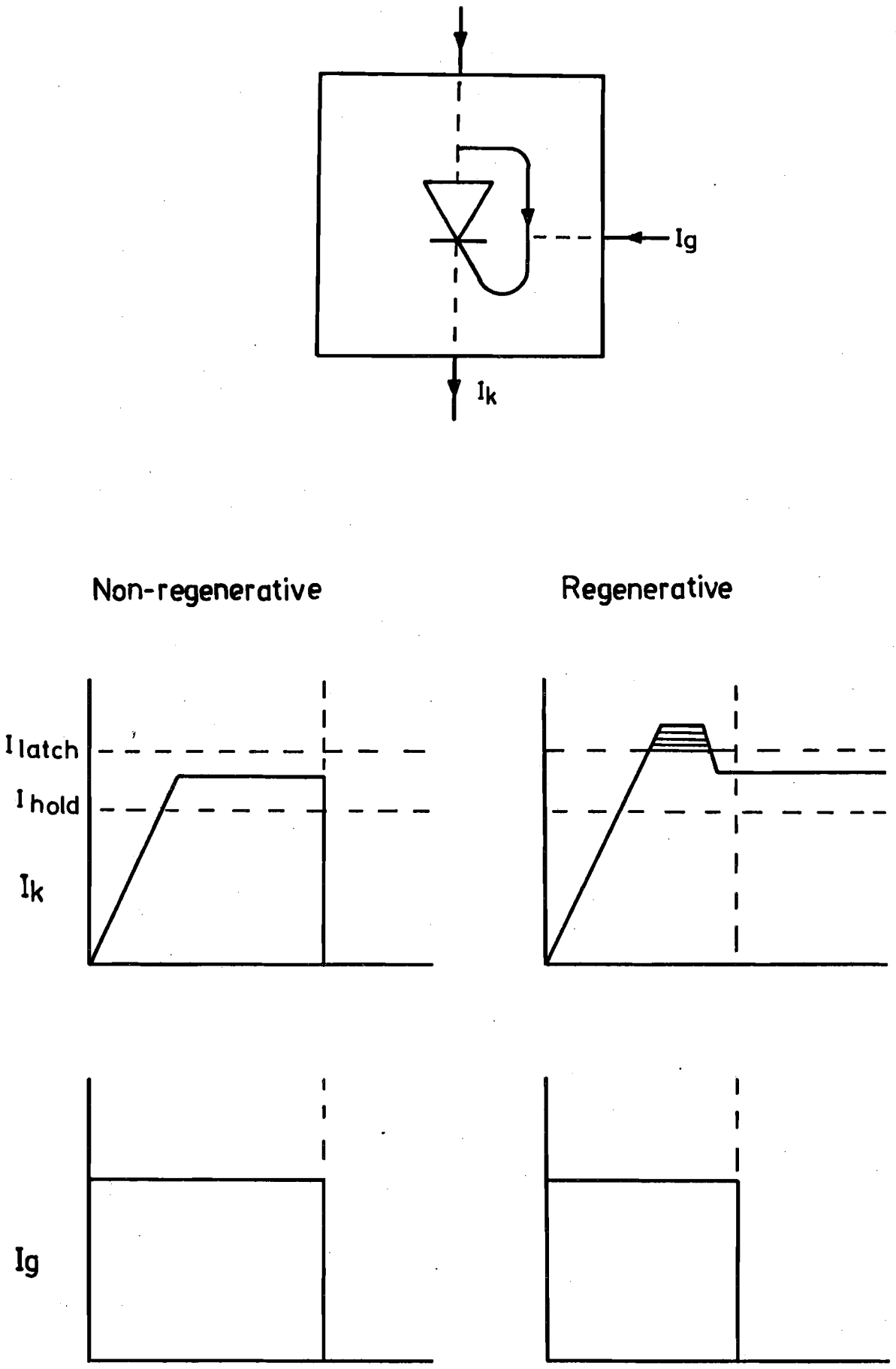

FIG 1. Regeneration, Latching, Holding

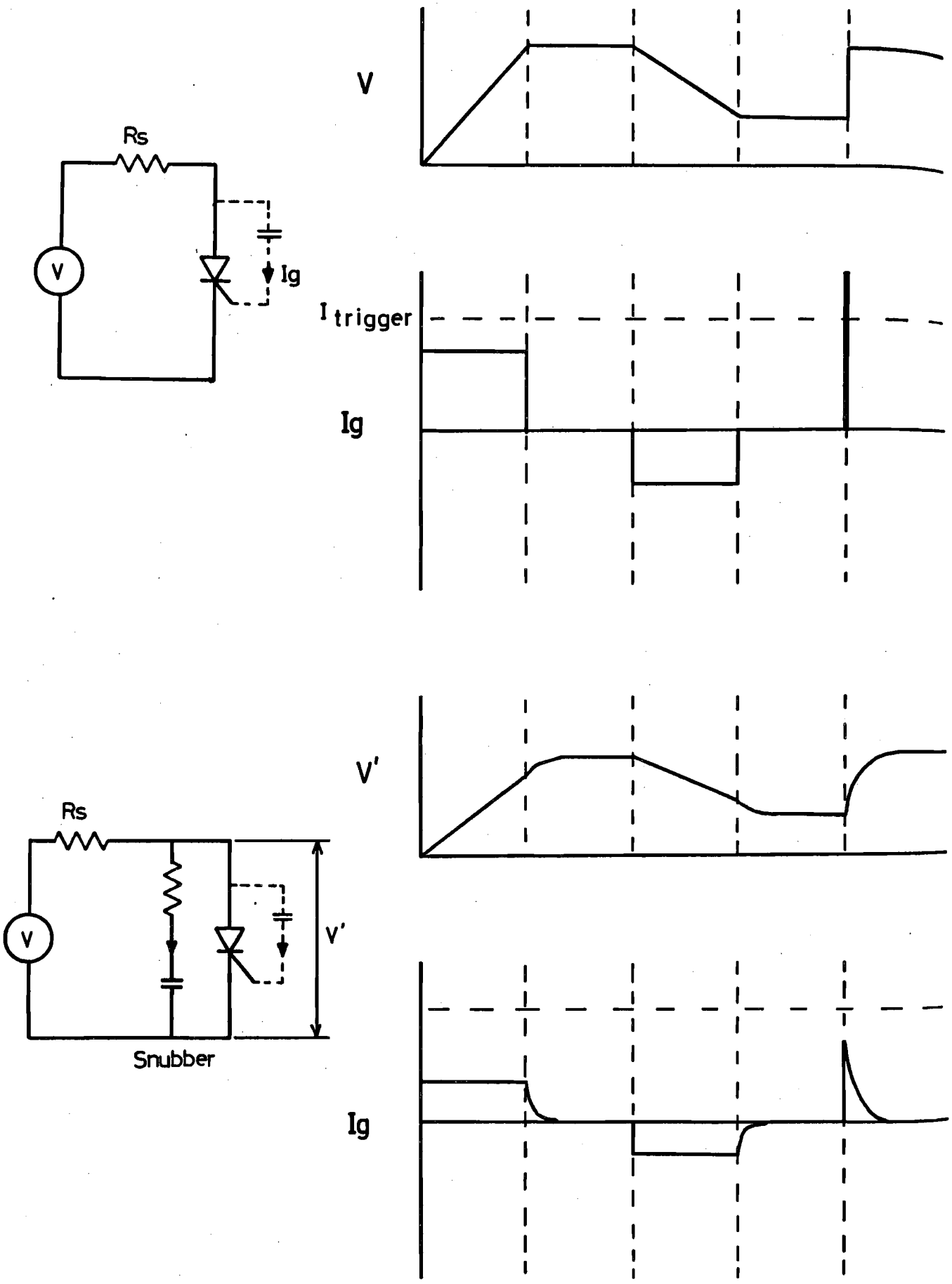

FIG 2. DV/dt

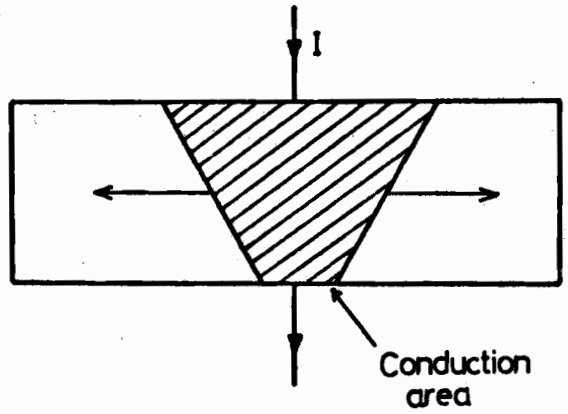

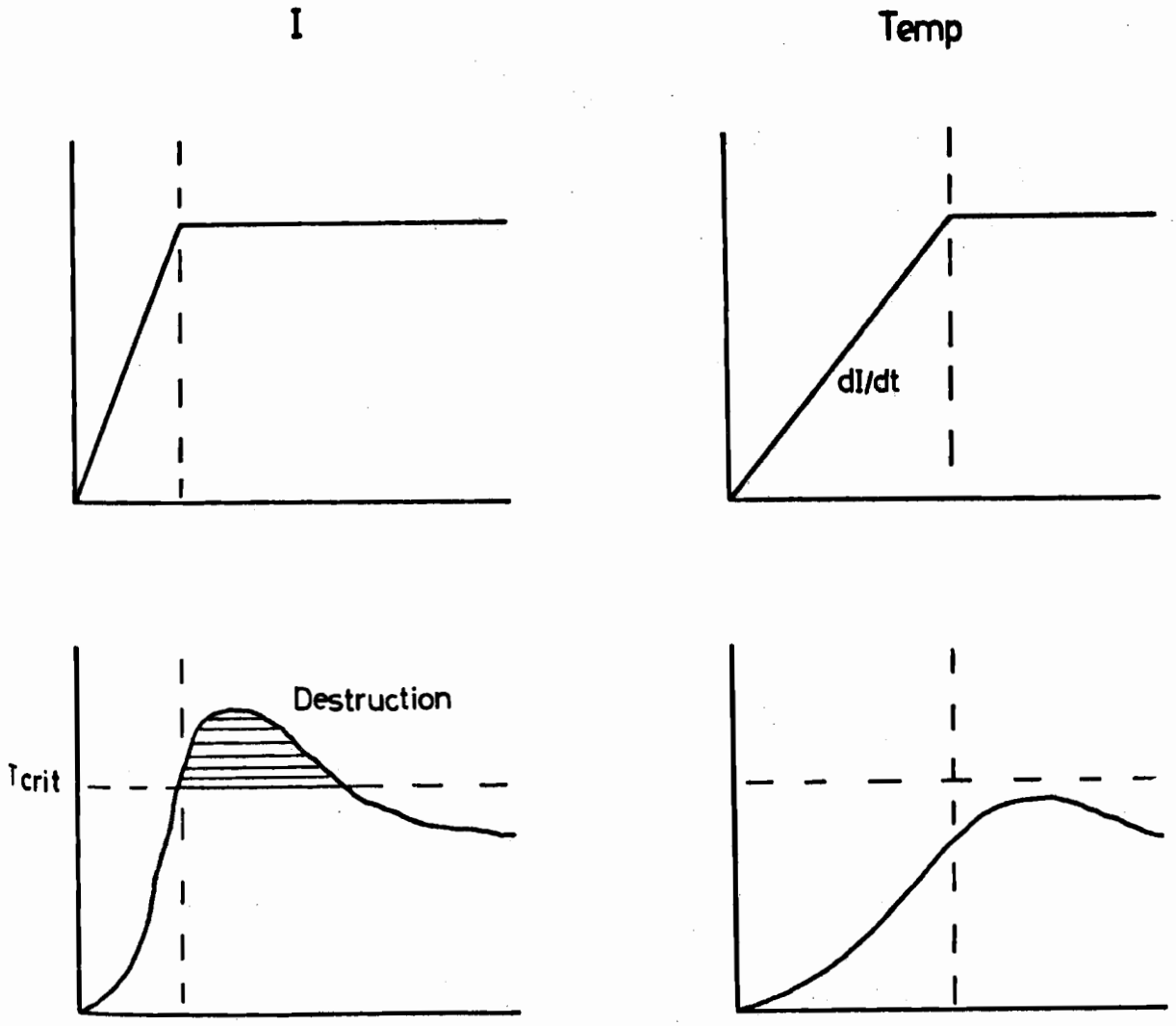

FIG 3. DI/dt

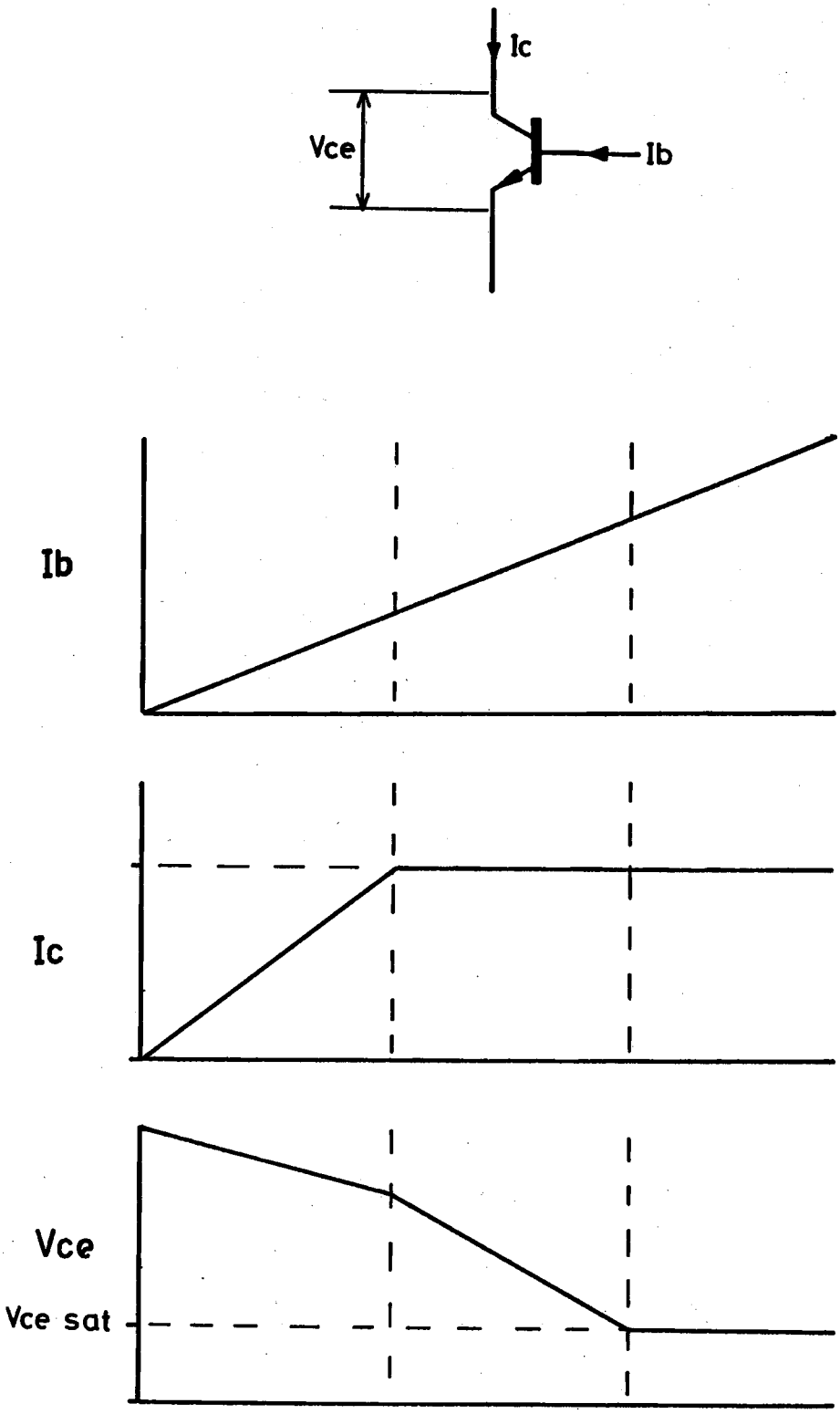

FIG 4. Transistor saturation

Single Phase Half Controlled

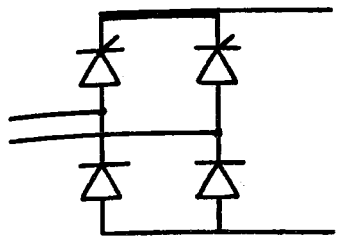

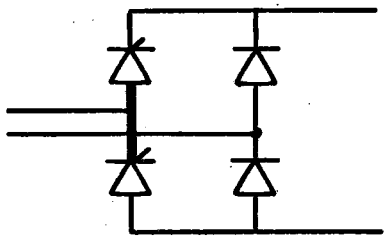

Three Phase Half Controlled

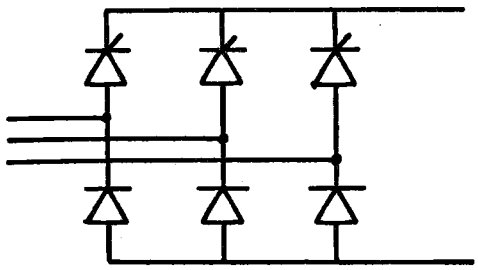

Single Phase Fully Controlled

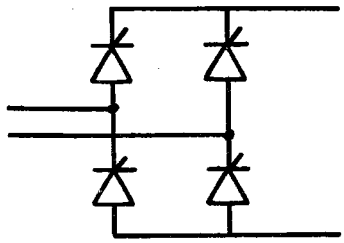

Three Phase Fully Controlled

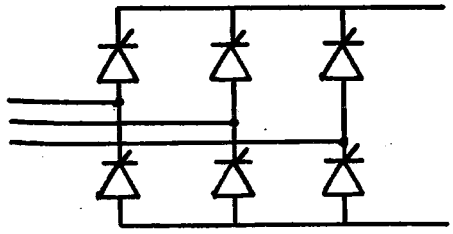

FIG 5. Rectifier topology

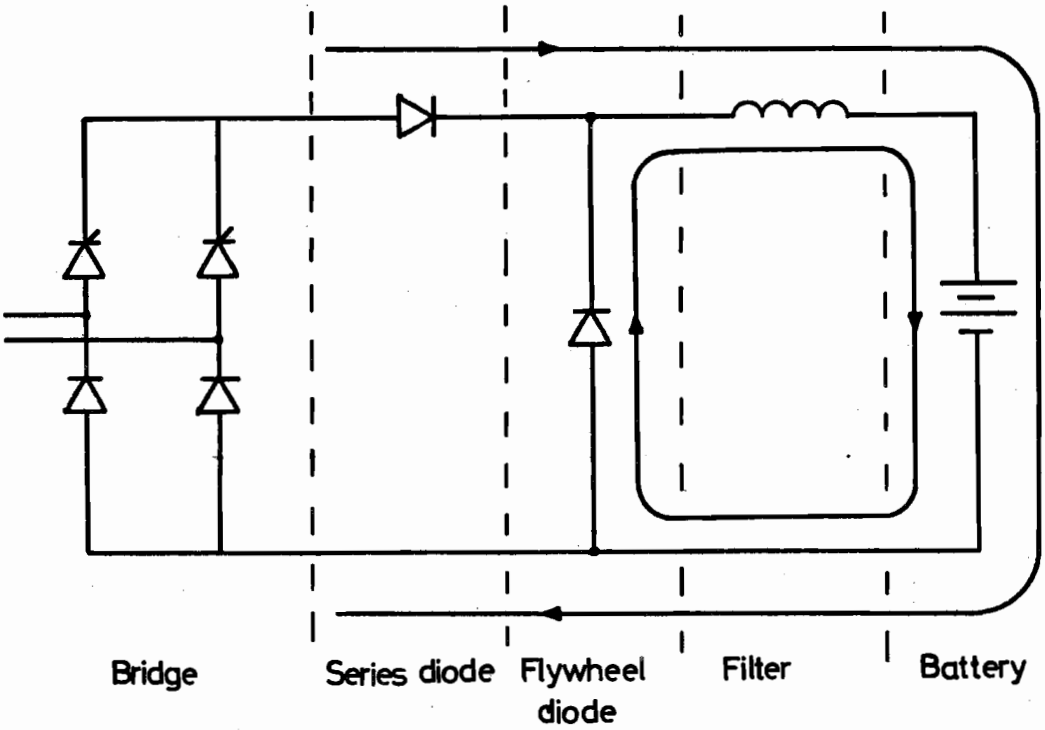

FIG 6. Battery charger topology

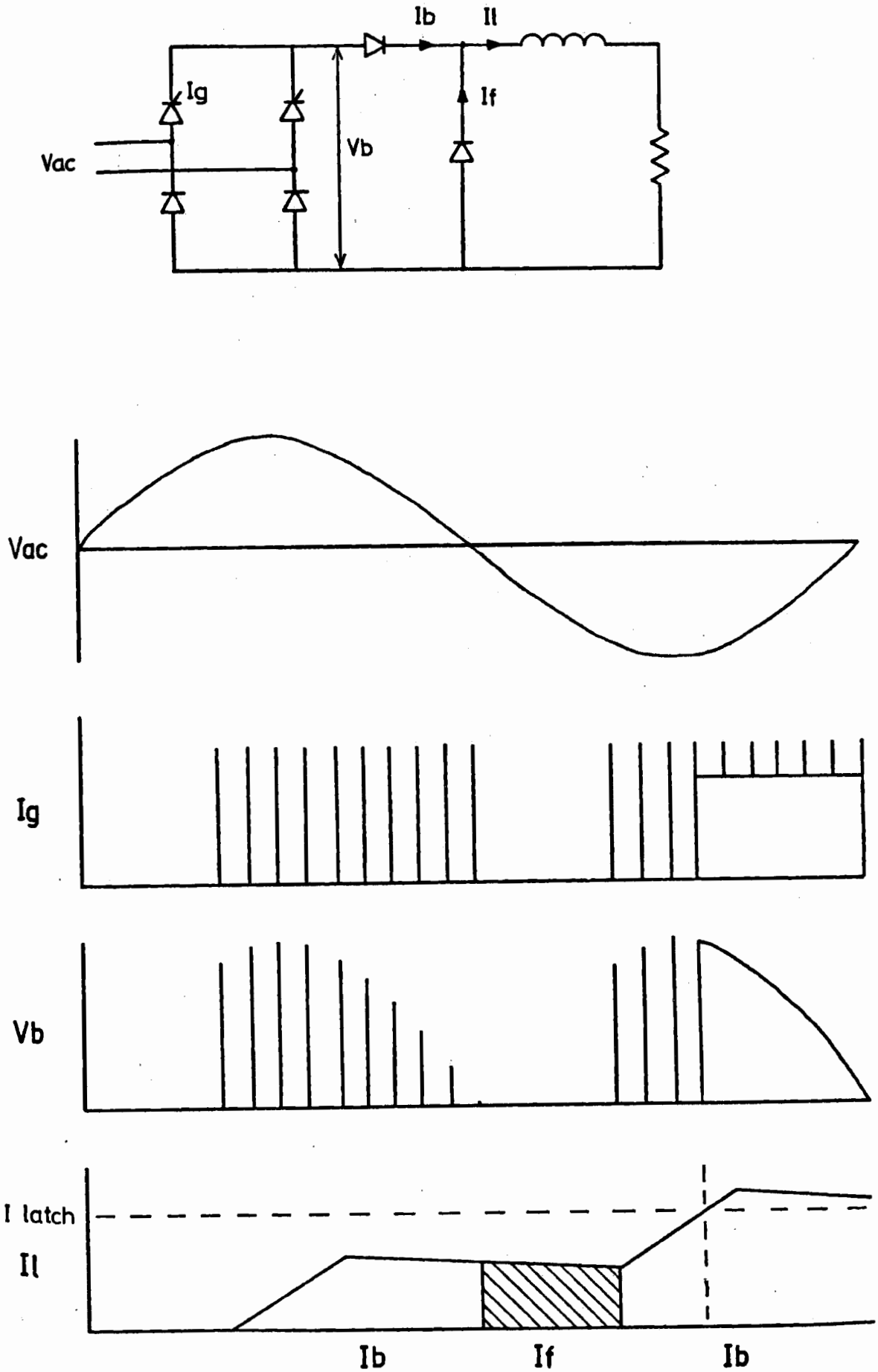

FIG7. Rectifier without bleed load

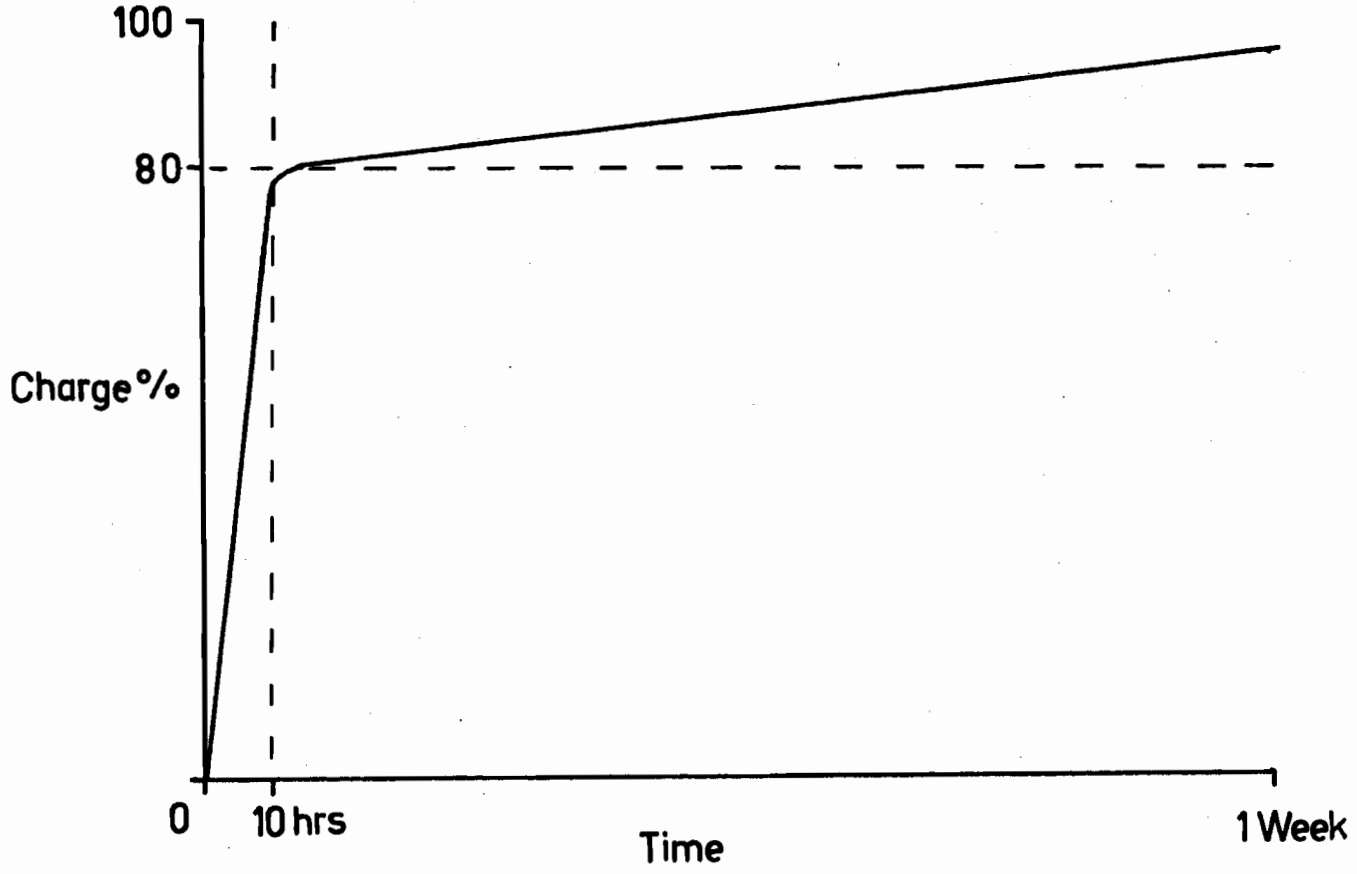

FIG 8. Battery recharge

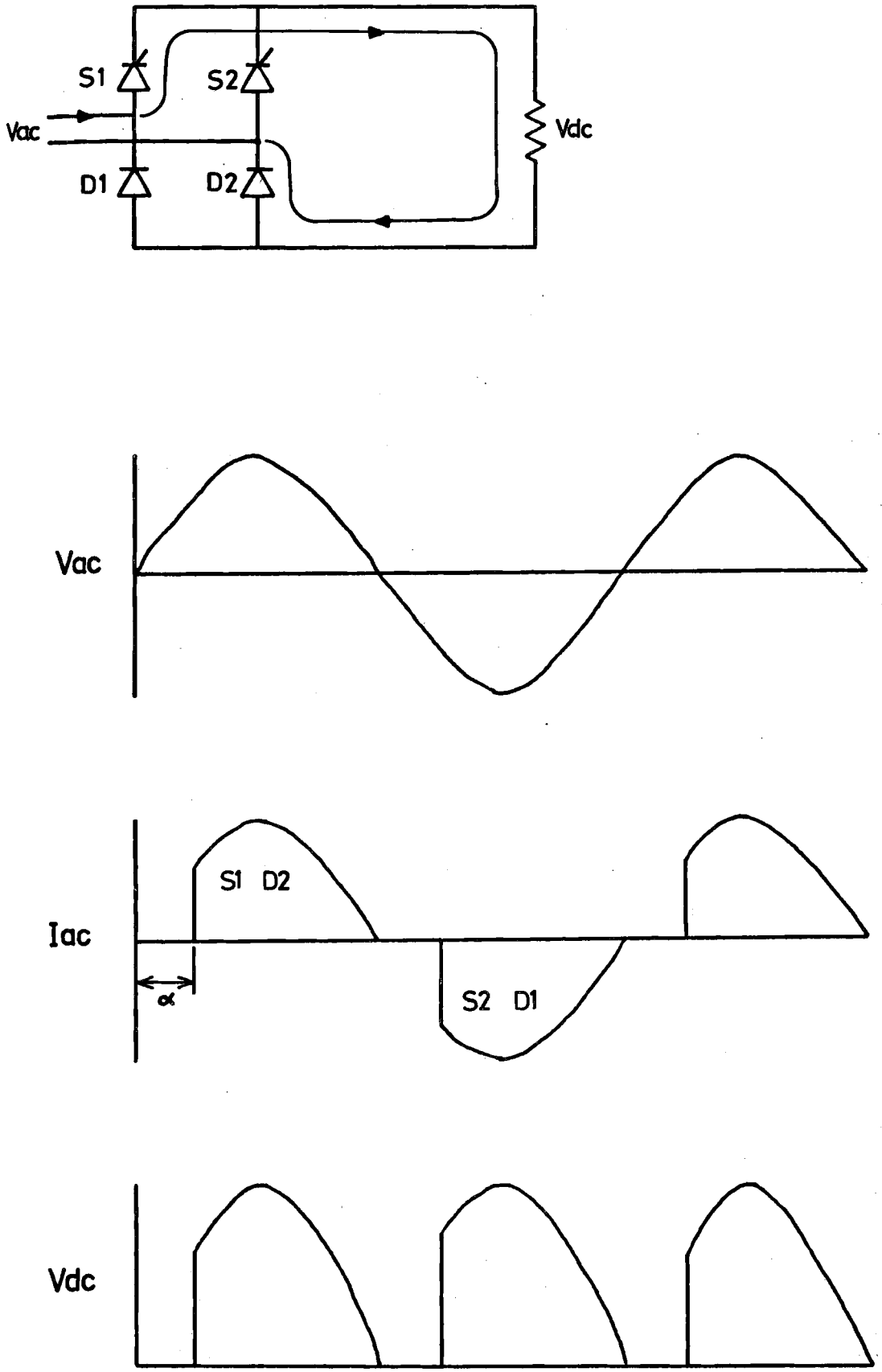

FIG 9. Rectifier waveform distortion

Centre Tapped Load

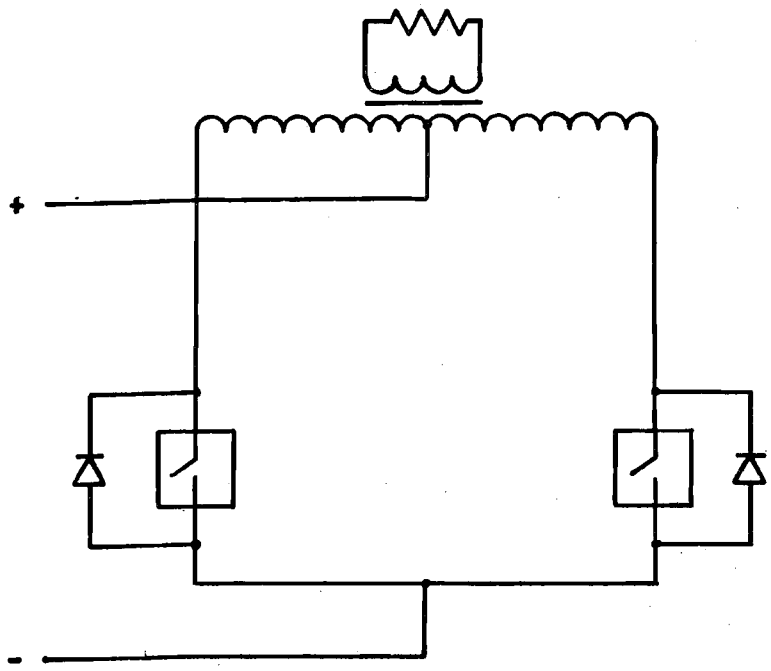

Bridge

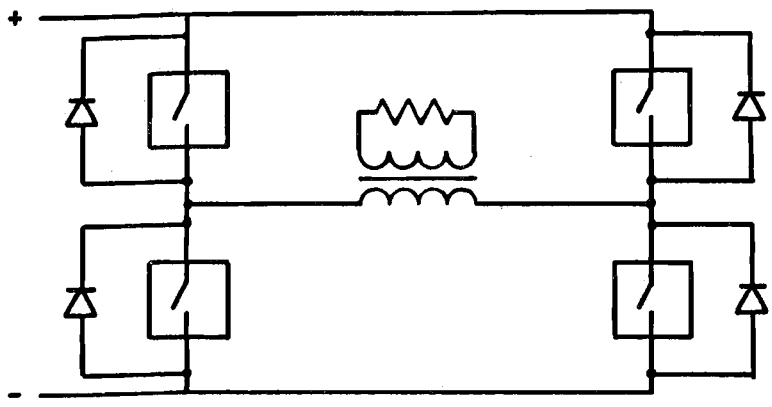

FIG 10. Inverter topology

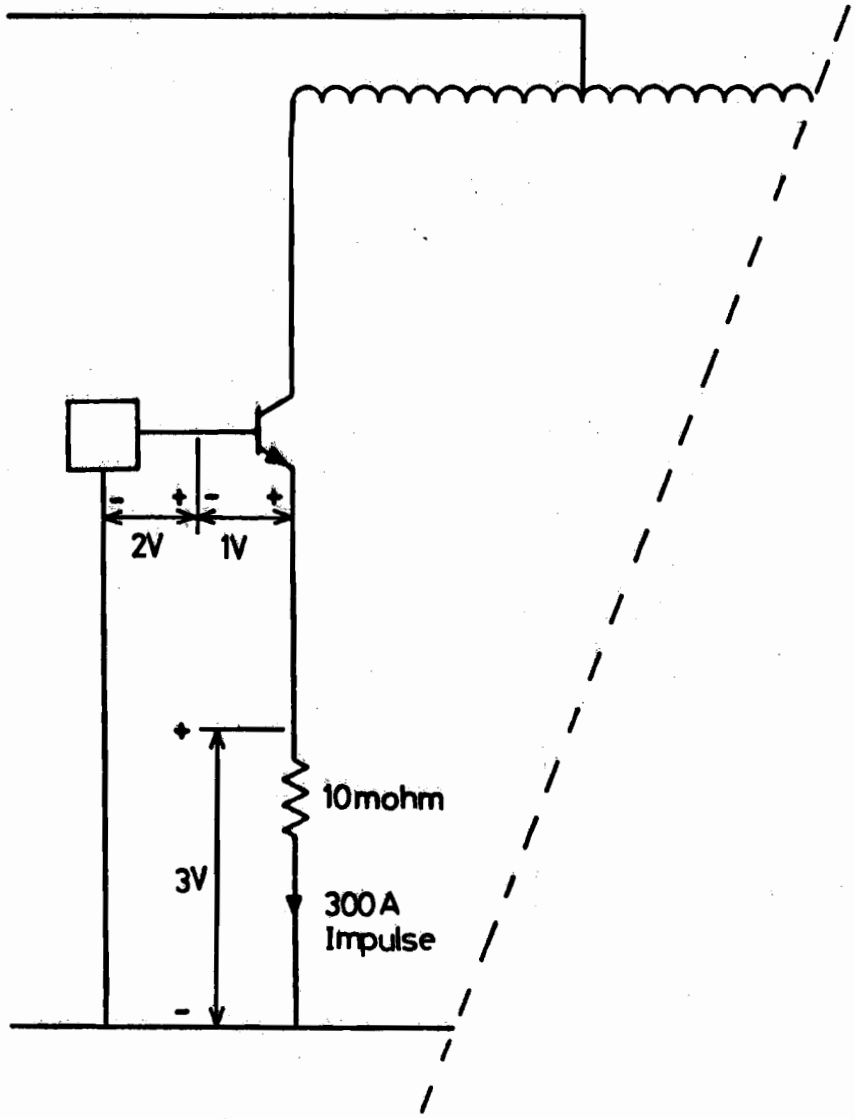

FIG 11. Impulse currents

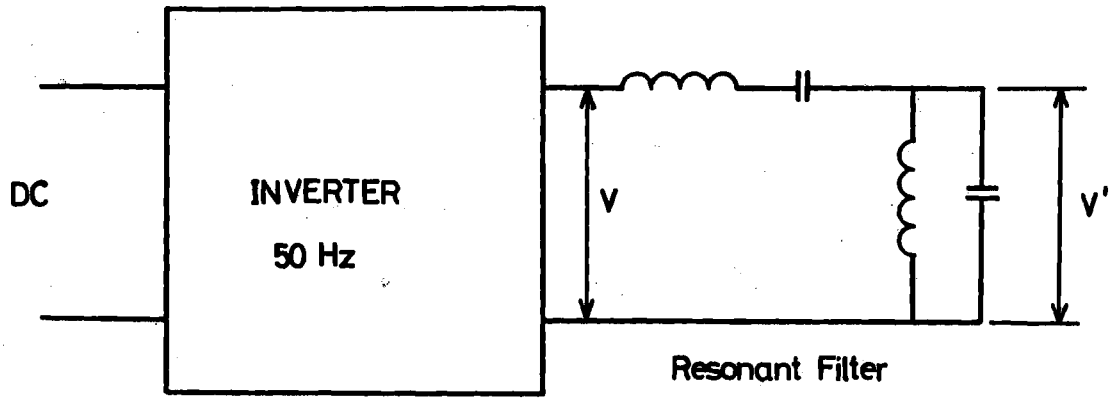

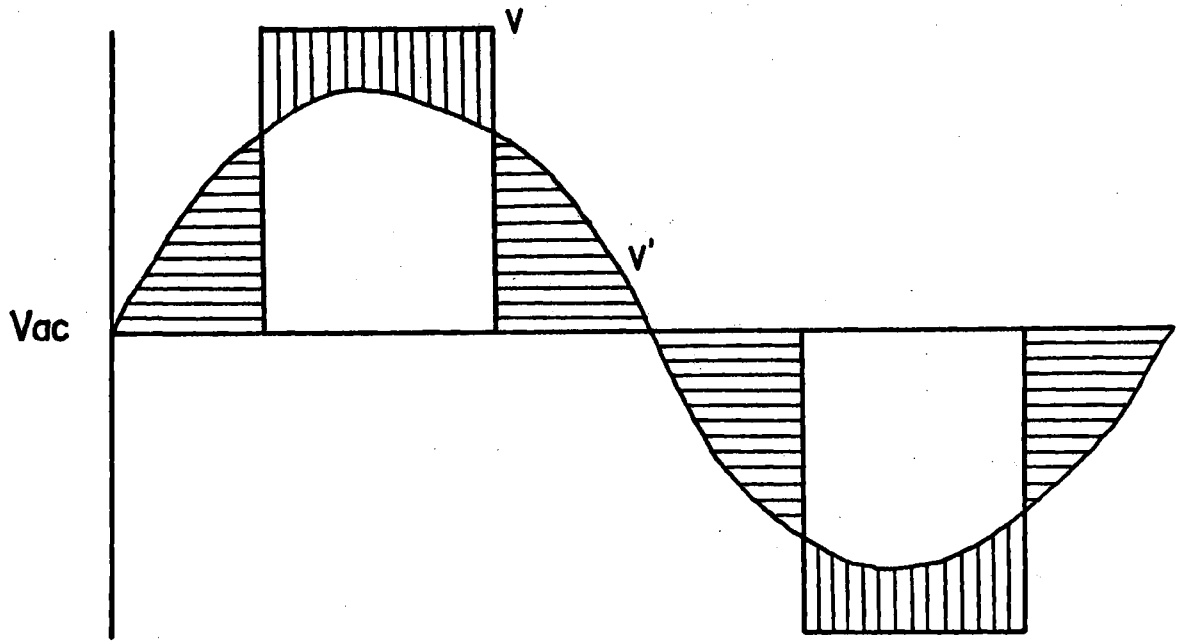

FIG 12. Sine wave Inverter

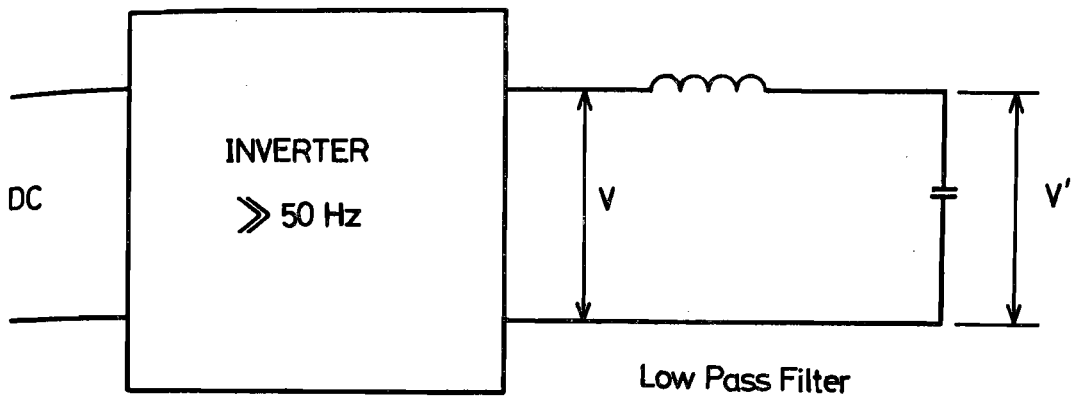

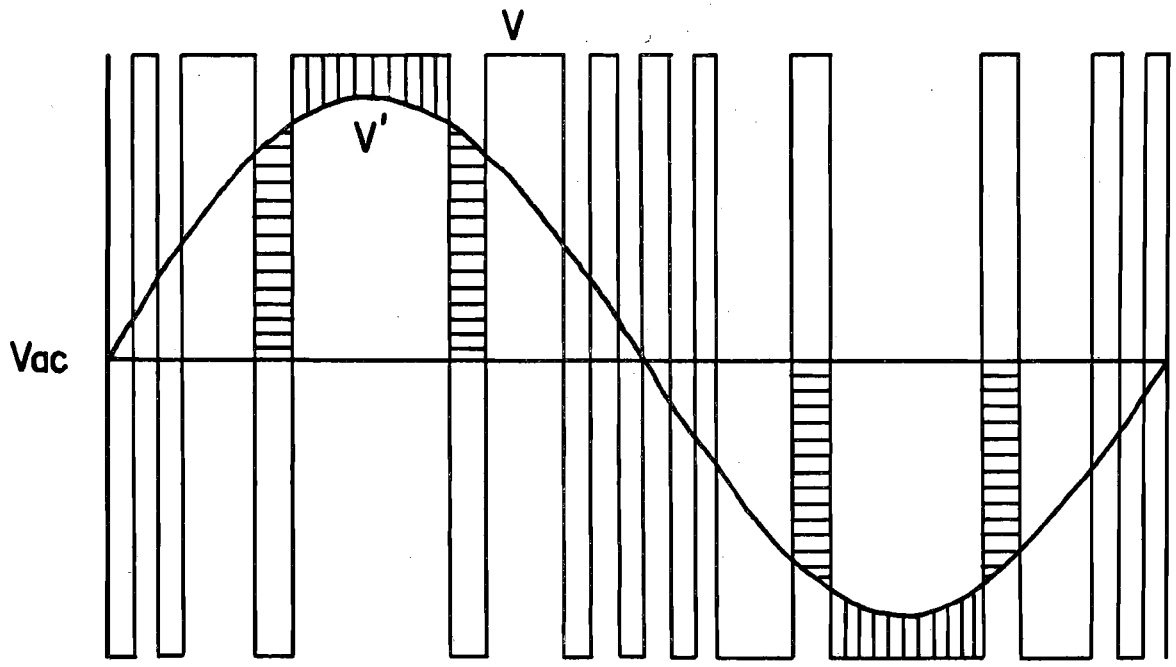

FIG 13. Sine wave Inverter - PWM

INVERTERS FOR ALTERNATIVE/RENEWABLE ENERGY SYSTEMS

Mr T Seale

Geebung Associates Pty Ltd, Grafton

INVERTERS FOR ALTERNATIVE/RENEWABLE ENERGY SYSTEMS

T.R. SEALE.

Design Engineer, Geebung Associates P/L. Grafton. NSW.

Although energy may be effectively utilised in many forms, electrical energy is the most convenient or only form of energy for many applications e.g. lighting and electronic communications.

Most alternative/renewable energy systems store energy for use electrically in batteries. Utilization of this energy at 240Vac instead of at the DC battery voltage is made possible by using an inverter.

An inverter is a device which takes DC electrical energy as obtained from batteries and converts this to ac electrical energy usually at a higher voltage e.g. 240Vac. This conversion process always incurs an energy loss.

The use of a 240Vac distribution system in an alternative/renewable energy system offers many advantages over a lower voltage DC system, some of these being:

* Most readily available and easily serviced tools and appliances are made to operate on 240 volt ac. These 240 volt ac appliances are also considerably cheaper than special low voltage DC appliances.

* Standard, readily available and efficient fluorescent lamps can be used if the right inverter is used. Fluorescent lamps will reduce energy consumption to 30% of that required to give the same light using incandescent lamps.

* Distributing electricity is easier, cheaper and more efficient at 240 volts. Smaller and cheaper cables can be run over longer distances allowing the power house to be sited in the most suitable location.

* An inverter with good RMS voltage regulation will maintain a stable output voltage and load power, thus compensating for wide variations in battery voltage during charge and discharge, resulting in higher energy efficiency.

* An inverter with a reliable low battery cut-off will protect the batteries from being overdischarged. Over-discharging batteries will shorten battery life.

* Standard "mains" type wiring practices are used. Thus any licenced electrician can easily do all wiring.

* Radio frequency interference (RFI) produced by all efficient low voltage DC fluorescent lamps is eliminated.

* A standard 240 volts ac generator can be used as a back-up and switched directly into the wiring system if required.

To obtain the above advantages in an alternative/renewable energy system the inverter must have the following characteristics:

* High efficiency across the entire working load range not just at full load. In a

homestead situation a 2kW inverter may spend 60% of its running hours delivering less than 200 watts and therefore must have high efficiency at low loads as well as at full load.

* Good transient current capability and the ability to run inductive loads so that induction motors may be started and run.

* The ability to work with power-factor-corrected loads to improve system efficiency.

* They must start and run fluorescent lamps correctly.

* Good RMS voltage regulation so as to maintain constant power to loads as input battery voltage and output load vary.

* Continuous automatic load sensing enabling the inverter to switch to standby mode when 240 volt is not required and automatically start immediatly any load is connected.

* Correct and stable output frequency.

* Low radio frequency emissions to prevent interference to other equipment.

* Full protection from user abuse, overloads, short circuits, overheating etc.

Inverters can be divided into two classes mechanical/rotary and electronic/solid state. The mechanical/rotary inverters are not suitable for alternative/ renewable energy systems because of their extremly poor efficiency on small loads. Electronic/solid-state inverters may be further divided into four groups;

(1) Square wave
(2) Modified square wave or pulse proportional
(3) Ferro-resonant sine wave
(4) Pulse width modulated (PMW) sine wave.

The sinusoidal ac waveform (Fig.1) is the most desirable for all ac appliances and the square wave the most undesirable while a well designed modified square wave provides a compromise on waveform but offers other advantages e.g. small load efficiency.

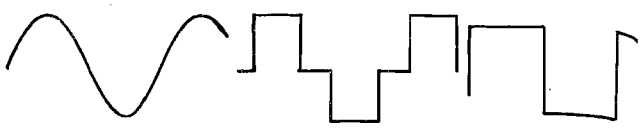

Sine wave | Modified square | Square wave

Figure 1

The square wave and ferro-resonant inverters are also unsuitable for alternative/renewable energy systems because of their poor efficiency on small loads, and hence are used mainly in other specialised applications. A well designed modified square wave inverter or a PWM sine wave inverter can meet all the above requirements.

Modified square wave inverters are available and reasonably priced. PWM sine wave inverters are slightly less efficient at small loads, much more expensive and not readily available as yet. However PWM sine wave inverters will be the inverters of tomorrow.

The inverter rating or load capacity is of prime importance selecting the correct inverter for a particular installation. Too small an inverter may not handle starting transient or peak loads. Too large an inverter is a waste of capital and may result in low overall system efficiency due to poor efficiency on small loads e.g. a night load of one light and a TV receiver. The correct choice of inverter can only be made after careful consideration of all the proposed system requirements.

In many instances considerable savings of capital and energy may be made by implementing effective energy management practices rather than using a larger inverter and hence larger support system.

Two points that are of great

importance to the user and often overlooked initially are the inverter reliability and the backup and service available, together with the product support offered by the supplier and/or manufacturer. Inverter failure in isolated areas and/or long service delays can be intolerable for users of alternative/renewable energy systems.

This area of product/manufacturer reliability can only be assessed by contact with users of the same equipment in similar situations to your own. I recommend all purchasers ask their supplier to refer them to several users of his systems or products in situations similar to your own. Make the effort to contact these users and satisfy yourself as to the products performance, reliability and back-up.

HYBRID SOLAR AIR CONDITIONING - A CASE STUDY IN TOWNSVILLE

Mr S Sureshan

Department of Housing & Construction, North Queensland

HYBRID SOLAR AIR CONDITIONING

A CASE STUDY IN TOWNSVILLE

BY

SURAY SURESHAN

Mechanical Engineer (NQ)
Dept. of Housing & Construction
(Queensland Region)

AUGUST 1985

Paper presented at the Symposium/Workshop on Existing Technology for Renewable Energy Resources - 26/27th September 1985, at Capricornia Institute of Advanced Education, Rockhampton, Queensland.

ABSTRACT

The Department of Housing & Construction office in Townsville was originally designed and built to use a totally solar cooled air conditioning system. Attempted operation of this system proved unsatisfactory and a new mode of operation was sought. This new mode consists of a hybrid system whereby a conventional chiller assists the solar chiller. The conversion was recently completed. Test runs being carried out presently indicate attractive prospects for the new system with possible economic justification for future installations.

CONTENTS

1. INTRODUCTION

In 1977 the Commonwealth Department of Housing and Construction designed and constructed a solar powered air conditioning plant in Garbutt, Townsville, to gain first hand knowledge and experience in the application of solar energy for cooling. This was a research and development exercise using commercially available technology, and was never intended or expected to be cost effective in itself. The expectation was to gain and make available information which designers and operators could use in the future when rising costs and reduced availability of non renewable fuels compel or attract the use of solar energy for this purpose.

The building was also provided with a conventional electrically powered cooling system for use as a standby or operation on an alternate cycle basis to enable accurate comparison of operating and maintenance costs to be made between the two systems. The complete air conditioning system cost about $180,000.

Being an experimental project, a micro computer based data logging system was installed for monitoring and collection of information on plant performance.

Initial operation of the plant revealed many inadequacies in design, equipment manufacture, and system controls. Some of these deficiencies were corrected, but it was never possible to operate the solar cooling plant satisfactorily for a significant period. It was necessary to deactivate the solar plant and maintain acceptable conditions in the building using the conventional electric chiller.

Computer simulations of the solar plant operation were carried out using data obtained during the operation of the conventional plant and the analysis confirmed that it was impossible for the original solar plant to continuously meet summer cooling demands on its own.

Thus it became necessary to attempt a redesign of the system, to provide a workable installation, at minimal additional cost. This report presents the original design concept in brief and details a case history of the design revision.

2. BUILDING THERMAL PROPERTIES

By designing the building to be suitable for the particular location and operation, a significant amount of cooling energy was saved in the passive mode. Although this resulted in slightly higher initial capital expenditure it proved to be highly beneficial through reduced operating costs.

Attention was necessarily paid to details such as window areas, wall thickness,insulation, lighting levels, sealing etc. Due to a reduction in window areas resulting in reduced natural lighting and increased artificial lighting, a compromise had to be made.

All glazing used in the building was heat reflecting, laminated and tinted. The fibreglass sunhoods permitted only a few hours of winter sun to fall directly on the glass. The building shell consisted of thick walls of off-form concrete and lightweight metal deck roof. The walls and roof were well insulated providing a medium weight structure with good thermal properties. This medium weight structure was decided upon in preference to a suitable lighter construction due to various factors such as maintenance and construction costs.

Computer calculations were performed to accurately determine the building cooling requirement for selection of cooling plant. The results indicated that the peak cooling requirement of the building was only about 60% of other similar buildings in the Townsville area.

The flat gable roof slopes of 4 deg. and 6 deg. were normal for the area and was also thought to be the best slope for installation of collectors for summer cooling operation. The roof was strengthened to withstand the collector assembly loading of 17 tonnes. The collectors on the roof also provided additional shading.

3. THE DUAL COOLING SYSTEM

The original dual cooling system consisted of a solar powered chilling system and a totally independent electrically operated chilling system. Its design was similar to most systems operating around the world at that time. However, high levels of sustained solar radiation were necessary for this type of system to be economically viable. Unfortunately sufficiently high levels of radiation are not continuously available in practice and auxiliary power had to be used to meet design conditions. The usage of auxiliary heating far exceeded any savings obtained through the solar chiller. Thus the energy consumption of the solar cooling plant was higher than that required by the conventional plant and was costlier to operate. The components of the previous system and its operation are given below.

Solar

120 double glazed flat plate collectors (Beasley)	= 192 sq.m.
6 single glazed flat plate collectors (Yazaki)	= 12 sq.m.
1 hot water storage tank (insulated, steel)	= 22,000 Ltr.
1 chilled water storage tank (insulated, fibreglass)	= 14,000 Ltr.
2 Lithium Bromide/Water absorption chillers (Yazaki)	= 70kw(r)
1 electric hot water boiler (Woodley)	= 78kw
5 centrifugal pumps (Ajax)	= 6.4kw Total

Conventional

1 Water cooled reciprocating chiller (Carrier)	= 72kw(r)
2 Centrifugal pumps (Ajax)	= 3.3kw Total

Common

1 Air handling unit (sandwich panel construction)	= 3,700 L/s
1 Cooling tower (29.5 deg. C leaving water)(Yazaki)	= 120kw (hr)

Solar Cooling Operation

Pump P1 circulated water from the bottom of the hot water tank through the collectors and into the top of the hot water tank at 3.68 L/s (fig.1). The pump operation was controlled by a differential temperature controller sensing temperature difference between the bottom of the hot store and the collector outlet header pipe.

Pump P2 took water from the top of the hot store and circulated it through the electric boiler, to the two absorption chillers and back into the bottom of the hot water tank at the rate of 4.77 L/s. When the hot water temperature fell below a set level one chiller was shut by bypassing hot water around it using valve CV7. The boiler was normally inactive but when the temperature of the water to the solar chiller fell below 75 deg. C (minimum allowable to the chiller) it automatically started and maintained a constant supply of 85 deg. C. When the boiler was energised, valve CV2 diverted water away from the hot store for recirculation through the boiler.

Pump P3 circulated chilled water from the top of the chilled water store through both absorption chillers and returned it to the bottom of the store at 3.33 L/s. The solar chillers produced chilled water at 10 deg. C.

Pump P4, upon the call for cooling, sensed by the space return air temperature, operated to circulate chilled water from the bottom of the chilled store through the air handling unit coils and back to the top of the store at 3.33 L/s. Cooling water pump P6 operated when the solar chillers ran circulating water through the cooling tower at 8.1 L/s. The tower fan operated through a sump thermostat to maintain a leaving water temperature of 29.5deg.C.

Upon sensing near boiling conditions in the collectors, pump P_1 shut and the vent and drain valves opened to dump the hot water into the hot store. This prevented breakdown of collectors due to boiling. Circulation was restarted when the hot store temperature fell below a set level.

During weekends if sufficient hot water was available for chilling operation the solar chilling plant operated to reduce the temperature of the water in the chilled water storage tank.

Conventional Cooling Operation

The electric reciprocating, water cooled chiller was used as a standby for operation during solar plant shutdown and was also intended for alternate operation with the solar plant to compare the energy consumptions of both systems. It produced chilled water at 10 deg. C and pump P5 circulated water through the same air handling unit coil at 3.33 L/s. It used the same cooling tower but with pump P7 circulating only 3.0 L/s. During solar cooling operation the conventional chiller was manually isolated using valves in the piping system. Conversely the solar chiller was isolated at all other times. The chiller initially had a capacity of 54kw(r) using refrigerant R12 and was later upgraded for use with R22 to provide a cooling capacity of around 72kw(r).

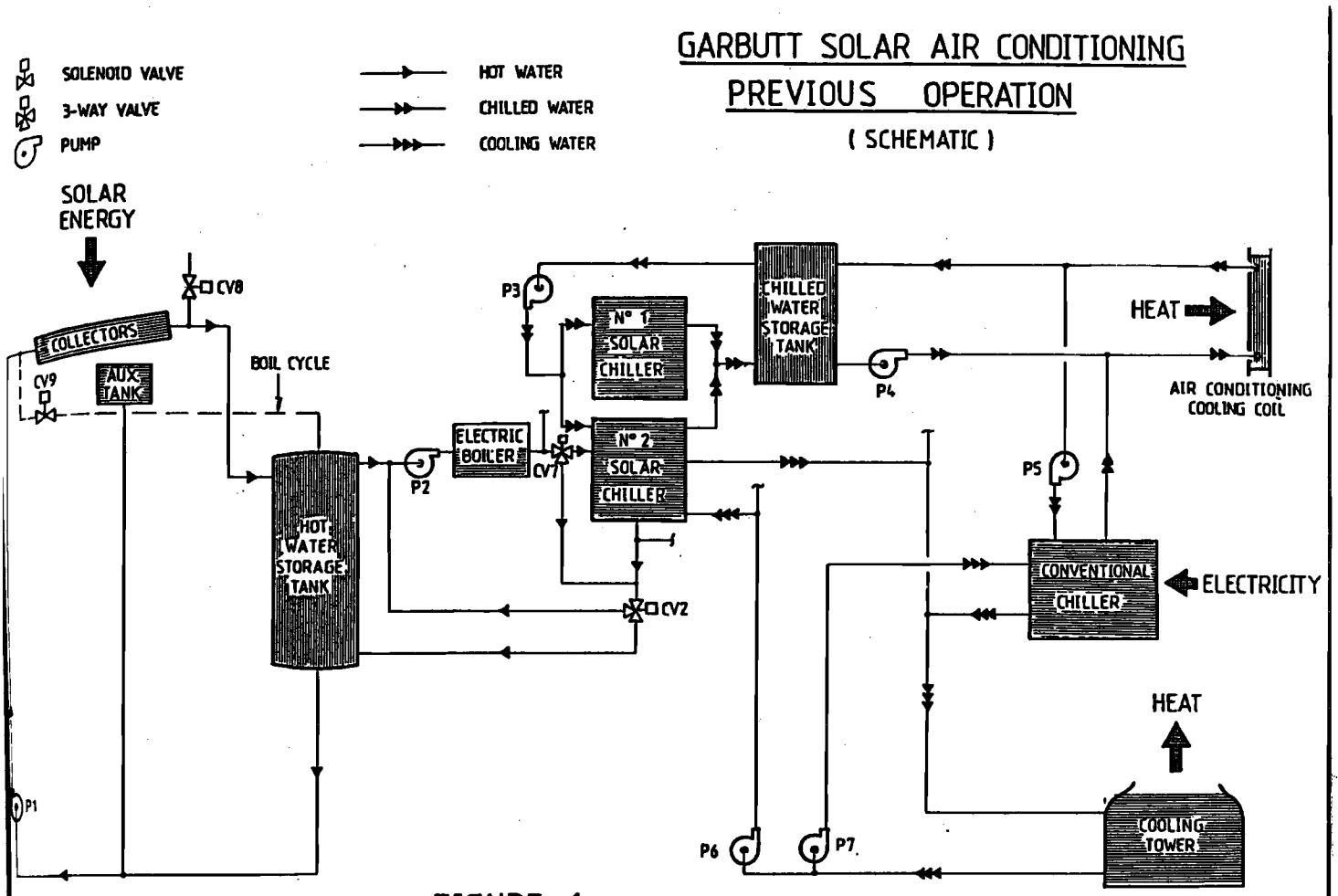

FIGURE 1

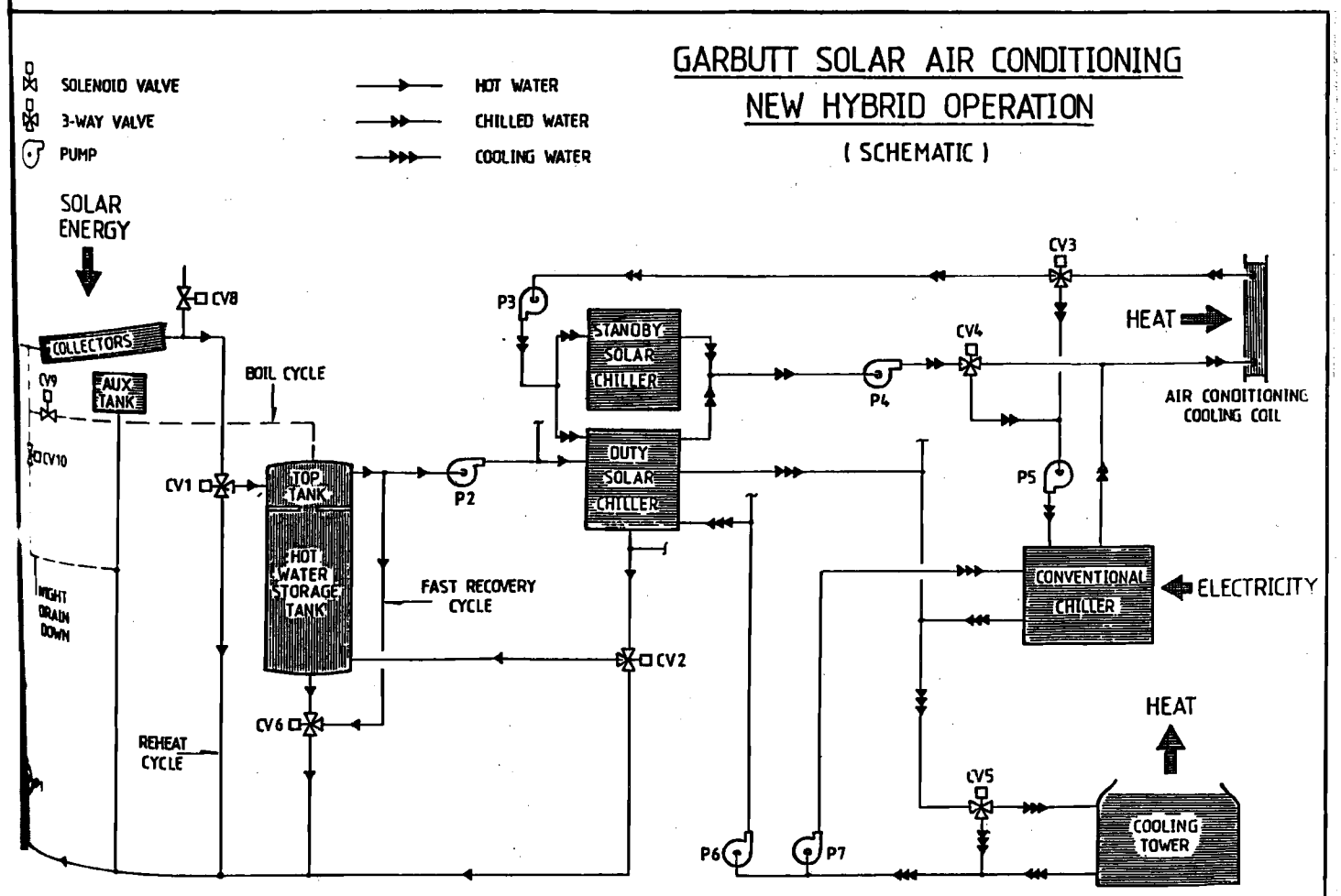

FIGURE 2

4. FAILURE OF COMPONENTS

As with any prototype system some major breakdowns occurred. During boiling cycle shutdown, it was inevitable that the collectors would be left empty resulting in stagnation conditions. Detachment of the collector plates from the risers resulted as the solder used had a melting point below the stagnation temperature of about 300 deg. C. All the collectors had to be dismantled and the plates resoldered with a higher melting point solder.

In addition, polyurethane foam insulation, used along the sides of the collectors, broke down at the high stagnation temperatures crumbling to powder and releasing vapour. The vapour deposited on the collector glazing reducing its effectiveness significantly. The insulation was replaced with fibreglass. Water condensation was observed between the double glazing of some of the collectors. This was due to the highly humid environment, the damage to sealing and the cooling of collector absorber plates in the night. This problem was alleviated by providing small vent holes in the collectors.

Initially the steel hot water tank was internally coated with an epoxy. The coating failed and delaminated from the tank surface after only a short period of operation. Subsequently another coating was tried and it too failed. No further coatings were applied. The tank was operated at full volume to eliminate the air/water interface and a separate copper auxiliary tank was provided to act as a cushion and make up tank. The water was also treated with a nitrite based, corrosion inhibiting chemical.

The piping arrangement of the collectors was found to be highly inadequate resulting in poor distribution of collector water flow. This was rectified by changing the array piping from full parallel system to part parallel part series system. This also eliminated air pocket problems.

5. INADEQUACIES OF THE DUAL SYSTEM

In addition to the component failures, the dual system had many inadequacies which worsened its performance. A brief summary of these is given below.

1. The installed solar collector area was undersized for the operation of both solar chillers resulting in non achievement of design conditions.

2. The design flow rate for the hot water circuits (3.68 L/s primary hot water loop, 4.77 L/s secondary hot water loop) resulted in a net upward flow in the hot water tank. This opposed the stratification effect and promoted mixing and degradation of the hot store.

3. During energy collection no control existed to prevent hot water at lower than useful temperature from entering the hot store. This again resulted in the degradation of any useful hot water at the top of the tank.

4. Thermal inertia imposed by the hot water storage tank was too high for fuller utilisation of solar energy when available. After cloudy days longer warm up periods were necessary before the top of the hot water store was sufficiently heated to start chilling operation.

5. The useful hot store was depleted at a faster rate during periods of low availability of hot water, due to the by-passing of hot water from the top of the hot store around the chiller and dumping to the bottom of the store. Although no total energy loss may have occurred, no further useful work could be derived from the lower grade hot water.

6. Returning of hot water from the solar chiller to the bottom of the hot store under all conditions resulted in wasting any remaining energy in the water as with proper stratification in the store, the bottom tank temperature was much lower than the return water.

7. The mode of operation of the chilled water tank permitted undesirable mixing of supply and return water resulting in lower performance.

8. The large volume of the chilled water tank created a thermal inertia whereby useful chilling could only be achieved if the solar chillers worked for more than a few hours.

9. It was not possible for the conventional chiller to operate in unison with the solar chiller to assist in cooling during low solar radiation. The use of an electric boiler to supply the hot water necessary for the production of chilled water in the solar chiller resulted in a five fold increase in energy consumption to produce the same cooling capacity and rendered the system totally uneconomical.

6. NEW SYSTEM

Major changes were made to the existing installation in an attempt to overcome the inadequacies referred to in the previous section.

Instead of examining individual component performances and carrying out improvements on an adhoc basis, a re-evaluation of the complete system configuration and operation was carried out. It was already widely recognised that using a hot water boiler, especially of the electric type to provide auxiliary heating, was a grossly inefficient method of achieving solar chilling. The inevitable conclusion that the most economical method of supplementing any shortfall in cooling capacity was to use an electric chiller, had been arrived at some time ago. The new system was to incorporate solar chillers in series with conventional chillers whereby chilled water would be initially cooled by the solar chiller and any necessary additional cooling provided by the conventional chiller.

This new hybrid operation offered two significant advantages. Firstly even the smallest amount of cooling produced by the solar chiller (exceeding small parasitic pump power consumption) would result in a real power saving as it will reduce the load on the conventional system. Secondly the solar chilling system could be designed to provide an optimum level of contribution required for that location and operation, instead of being a 100% system. This reduces solar chilling system costs considerably and is a major change in the design philosophy of solar powered air conditioning systems.

The conversion to a hybrid system alone is not sufficient to improve the cost performance of solar systems as it only caters for the supplementation of shortfalls and does not increase solar contribution. Methods of enhancing solar harvesting to provide extended solar cooling operation for better overall solar contributions were studied. Data gathered during the previous operation periods and all problems experienced at that time were analysed. New approaches, which would involve only minimal alterations to the existing installation were considered and a new mode of solar harvesting, incorporating many significantly different operations was designed. Computer simulations were performed using the "TRNSYS" programme to evaluate the new design and they indicated that as expected the new design was considerably better. The changes performed at the Garbutt plant are given below.

Absorption Chillers and Collectors

Instead of adding extra solar collectors to increase solar energy harvesting to operate the two solar chillers, one solar chiller was shut down to remain on standby and only one was made operational. This gave an excess collector capacity of about 30%. Cooling water and hot water supply were shut to the standby chiller but chilled water continued to pass through it to maintain full flow to the air handling coil.

Hot Water Circulation

The hot water circuits were combined to permit a single loop operation when possible. If radiation levels are above 450 w/sq.m and the temperature at the bottom of the hot store is below 85 deg. C, energy collection commences. Hot water is circulated/recycled by pump P1 through the collectors at the rate of 3.1 L/s until temperature out of the collectors exceeds 83 deg. C and then valve CV1 (see fig.2) opens to permit storage of energy in the tank.

If cooling demand existed in the building, upon sensing a temperature above 82 deg. C in the top tank, pump P2 will circulate hot water from the top tank through the chillers. If solar energy storage was in progress, valve CV2 would direct water from the chiller to the collectors, by-passing the tank. If no solar harvesting was in progress or recycling of collector water was occurring, water from the chiller would be returned to the bottom of the hot store.

Solar cooling is terminated upon either sensing 77 deg. C hot water in the top tank or building return air temperature falling below 21 deg. C. An additional safety cut out was provided to stop supply of hot water below 75 deg. C.

During the "fast recovery" cycle, water is drawn from the top of the hot store for heating in the collectors. This enables the top tank to be heated up quickly to the required temperature level, for cooling to commence as early as possible in the morning and after any interruption due to poor weather. Thus the operation does not rely fully on the stratification ability of the tank. The highly wasteful, by-passing of hot water around the inactive chiller has been discontinued. The electric boiler was removed from the system.

Hot Store

The 22,000 litre hot water storage tank was partitioned into two sections. The top section has a capacity of 4500 litres and is used as the main operation tank. The partitioning was provided to create a positive separation between the top tank and the remaining store. The top tank can operate one chiller for about 1 hour without solar radiation. It acts as a store for short cloud cover periods. The new flow rates of 2.6 L/s to the chiller and 3.1 L/s to the collectors results in a net downward flow of 0.5 L/s in the tank. This prevents degradation of the top tank and slowly heats the storage tank providing positive energy storage during normal operation. During weekends the storage section receives the full flow. The arrangement also decouples the operating tank from the storage section and removes the thermal inertia of the large storage capacity.

Chilled Water Circulation

The new chilled water circulation system operates in three modes;

(a) Solar - Total solar chilling.

(b) Hybrid - Part solar, part conventional chilling.

(c) Conventional - Total electric chilling.

During solar chilling, chilled water from the air handling coil is pumped through the two solar chillers by pump P5 at 3.3 L/s. Full chilling is achieved in the duty chiller and no change of state occurs in the standby chiller. After mixing at the outlet of the chillers it is pumped to the air handling coil by pump P4.

Upon call for more cooling in the building, valve CV4 directs chilled water from the solar chillers to the conventional chiller to permit supplementation of cooling. Pump P5 circulates chilled water through the conventional chiller to the air handling unit. This is the hybrid mode of operation.

When the solar chiller stops operation due to unavailability of hot water, valve CV3 diverts water from the coil directly to the conventional chiller to continue operation in the normal conventional mode. The complete operation is automatically controlled and no manual interference is required. The chilled water tank has presently been valved out of operation.

Condenser/Cooling Water Circulation

Conventional chiller condenser pump P7 and solar chiller cooling water pump P6 operate when called upon by the respective chillers. The same cooling tower is used to provide cooling water for both systems simultaneously or individually. It is possible to operate in this manner as the combined heat rejection from the new hybrid system is less than the heat rejection from the original two solar chiller system. The solar chiller operation was sensitive to fluctuations in the cooling water temperature. Thus a new by-pass valve was provided on the cooling water line to maintain constant temperature water supply to the chillers. This has also eliminated over-condensing problems in the conventional chiller and prevents risk of crystallisation in the solar chiller during winter operation.

Boiling Cycle & Night Drain-down

The old boiling cycle has been retained with minimal alterations, to use the same pipe work to drain the collectors during shut down. Valve CV10 permits water to be drained in to the auxiliary tank for night shut down. During boiling cycle shut down, valve CV9 directs water to the top tank to enable collection of the boiling water. If boiling occurs and solar harvesting is stopped an attempt is made to restart collection after a set time period, if other conditions permit.

Conventional Chiller Control

The standard controls in the reciprocating chiller were not designed for use in a hybrid system of this nature. Thus they were replaced with electronic controls which provided more precise controls for stepping cooling capacity. The loading and unloading of the chiller was not at regular stepped capacities. Its two compressors had short cycling timers set up for stop to start operation. The electronic controls, provided more uniform stepping, proper load sharing, quick response, good repeatability and start to start short cycle timing. These allowed the chiller to supplement cooling energy with reduced cycling. Provision has been made for smaller steps of capacity control in the future, if the need arises.

Controls, Monitoring & Recording

The original system had a simple control configuration and thus was controlled using conventional relays. However the new controls system requiring significantly more decision making with a correspondingly high amount of inputs and outputs (fig. 3) was better suited to the incorporation of a programmable logic controller. The programmable logic controller used for this purpose was a fully electronic one with solid state timers. It totally eliminated the need for any decision making relays. The flexibility of the controller was such that different modes of controls could be selected for experimentation by key programming and without any wiring changes. The air conditioning controls have been set to maintain a building return air temperature of 24 deg. + 1.5 deg. C.

GARBUTT SOLAR AIR CONDITIONING
CONTROL ELEMENTS
(1985)

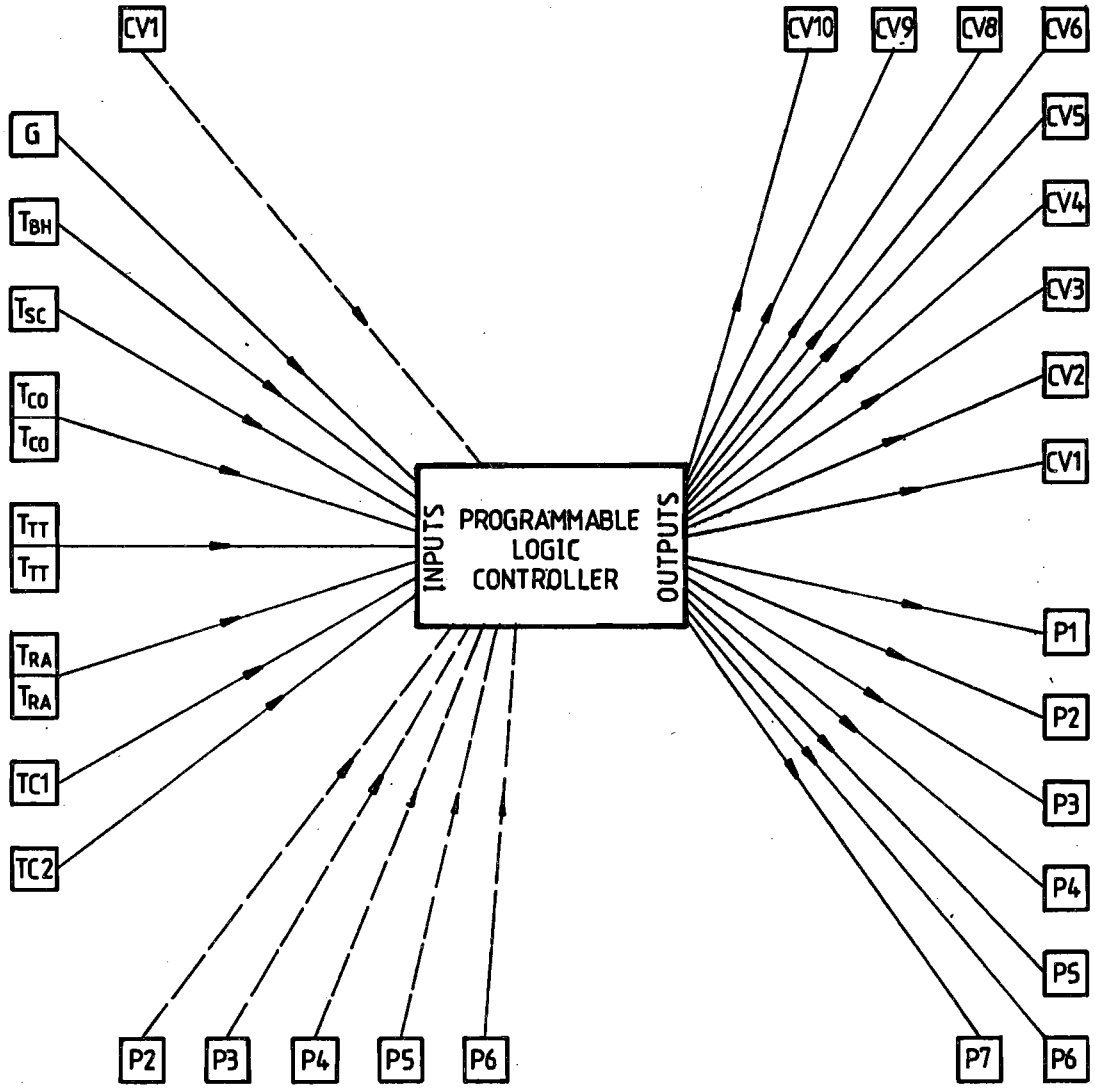

LEGEND

P1	PRIMARY HOT WATER PUMP	G	SOLAR RADIATION
P2	SECONDARY HOT WATER PUMP	T_{BH}	BOTTOM OF HOT WATER TANK TEMPERATURE
P3	CHILLED WATER PUMP (SOLAR)	T_{CO}	COLLECTOR OUTLET TEMPERATURE (2 BANDS)
P4	CHILLED WATER PUMP (SOLAR)	T_{TT}	TOP TANK TEMPERATURE (2 BANDS)
P5	CHILLED WATER PUMP (CONVENTIONAL)	T_{RA}	RETURN AIR TEMPERATURE (2 BANDS)
P6	COOLING WATER PUMP (SOLAR)	T_{SC}	SAFETY CUT OUT TEMPERATURE
P7	COOLING WATER PUMP (CONVENTIONAL)	TC1	TIME CLOCK 1 (7 DAY)
CV	CONTROL VALVE	TC2	TIME CLOCK 2 (5 DAY)

FIGURE 3

The existing microprocessor-based monitoring and recording facilities was reused. Some sensors were changed to more suitable locations, for temperature monitoring, with the new piping configuration. The existing sensors were found to be drifting and malfunctioning due to immersion in rapidly changing temperatures. The sensors measuring temperatures used for energy calculations have been changed to a totally encapsulated type. Also on/off status indicators for all pumps and fans have now been included for recording to enable energy calculations.

Provision of backup batteries to operate the monitoring system and recorder is presently being investigated. This is essential so that data gathering is not interrupted during power outages.

Maintenance

Collector surfaces which had accumulated high levels of dust were washed down. The chilled water, cooling water and hot water systems were flushed with chemicals and dosed with suitable corrosion inhibitors. The absorption chiller was re-evacuated to remove accumulated hydrogen and air in the system. Water flows were checked and rebalanced. Calibration checks were performed on all control sensors and faulty control sensors were replaced.

Hybrid System Components - Summary

126 Solar Collectors	=	204 sq.m.
Top tank section in hot water store	=	4500 litres
1 Hot water storage tank	=	17,500 litres
1 Lithium Bromide/water chiller	=	35 kw (r)
1 Reciprocating chiller	=	72 kw (r)
7 Centrifugal pumps	=	9.7 kw (total)
1 Air handling unit	=	3700 L/s
1 Cooling tower	=	120 kw (hr)

7. RESULTS

Hybrid solar chilling operation at Garbutt commenced in January 1985. After one month of operation the plant was shut down due to extended periods of cloudy weather which did not permit continuous operation. When the plant was restarted in March it was discovered that some of the old control sensors and related control equipment had failed. Also the monitoring recorder had failed. After replacement of the control equipment, the plant was restarted in April. However, no automatic recording of data was possible due to the failed recording equipment. Replacement parts for the recorder had to be obtained from U.S.A. and these were received recently. The recorder restarted operation in August and results for cool weather operation should be available in the very near future.

Typical results obtained through manual recording during one hour test periods in April/May are given below.

Test period - 11.20 am to 12.20pm on 29/4/1985

(a)	Total incident solar energy	=	160 kw. hrs.
(b)	Energy collected into hot store	=	70 kw. hrs.
(c)	Energy consumed by solar chiller	=	45 kw. hrs.
(d)	Cooling produced by solar chiller	=	20 kw. hrs.
(e)	Building cooling demand	=	30 kw. hrs.
(f)	Compressor power consumption	=	4 kw. hrs.
(g)	Total electricity consumption conventional	=	6 kw. hrs.
(h)	Total electricity consumption solar	=	4 kw. hrs.

1.	Collection efficiency	= 70/160	=	0.44
2.	Solar energy usage factor	= 45/70	=	0.64
3.	Solar chiller efficiency	= 20/45	=	0.44
4.	Solar contribution	= 20/30	=	0.67

The results given above indicate a high solar contribution level. However it is clearly seen that during the test period the cooling demand of the building was much lower than the peak cooling demand.

Typical instantaneous operating conditions during a test period in May are given in fig. 4. The calculations given below are performed at regular 10 minute intervals and summed.

Hot water in	= 83 deg. C	Cooling water in	= 29 deg. C
Hot water out	= 78.5 deg. C	Cooling water out	= 33.5 deg. C
Hot water flow	= 2.6 L/s	Cooling water flow	= 4.6 L/s

Electrical cooling	= (12.3 - 9.7)(3.3)(4.2)	= 36.0 kw.
Gross Solar contributions	= (14 -12.3)(3.3)(4.2)	= 23.6 kw.
Actual cooling by solar chiller	= (14.1 - 10.8)(1.9)(4.2)	= 26.3 kw.
Cooling load	= (14 - 9.7)(3.3)(4.2)	= 59.6 kw.
Electric power (conventional)		= 13.6 kw.
Electric power (solar)		= 4.6 kw.

The maximum cooling produced by the solar chiller in this hybrid system is limited to about 30 kw. The Garbutt building had originally been designed with a peak building cooling demand of 54 kw. Hence the hybrid solar system would have been able to contribute about 53% of the peak requirement. However, the building heat load has gradually risen, due in part to significant increases in office equipment. Thus the hybrid system could at best only meet 40% of the new peak summer cooling demand of 76 kw.

The cooling load distribution between the solar and conventional systems during another test period is given in fig. 5.

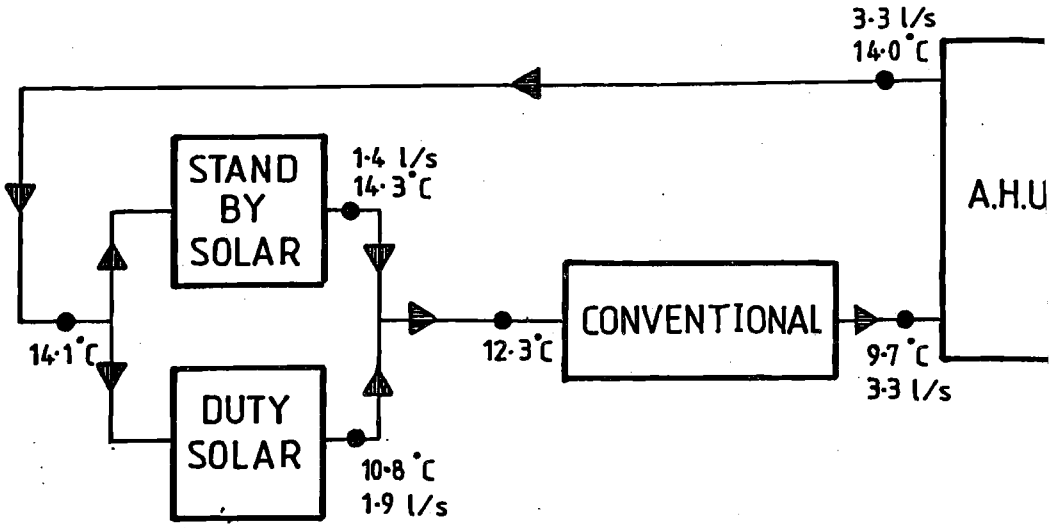

TYPICAL HYBRID OPERATION TEMPERATURES

FIGURE 4

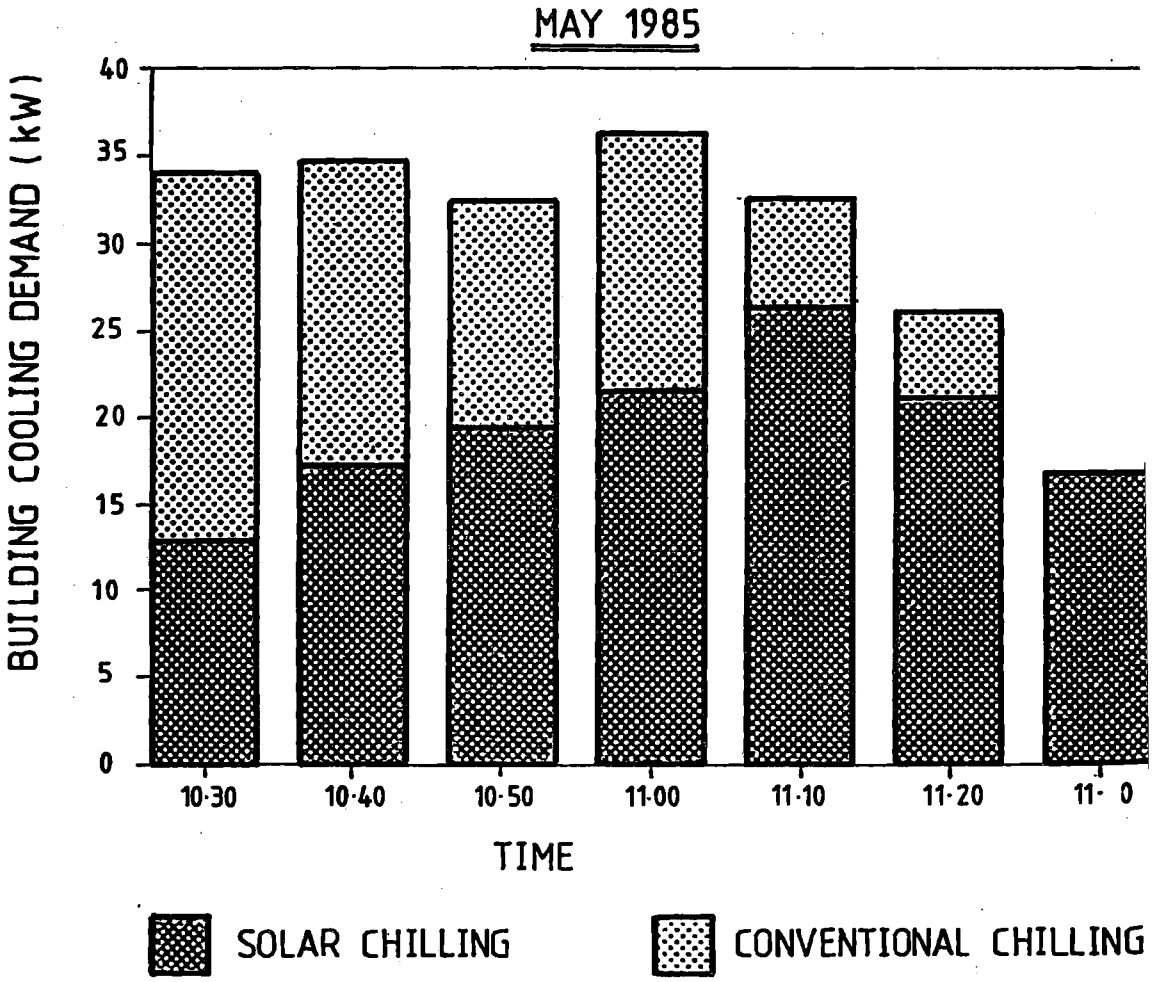

TYPICAL HYBRID COOLING LOAD DISTRIBUTION

FIGURE 5

8. OBSERVATIONS & REMARKS

The new hybrid system has been in operation on a continuous basis for more than four months and the results gathered to date have been very promising. Although a full summer operation has not been experienced the brief operation during January 1985 has clearly indicated the significant benefits of the new system. Providing weather conditions remain typical for Townsville for the next 9 months, an actual annual energy consumption comparison could be made between the new hybrid system and the previous full conventional system. Unfortunately as the previous full solar plant was never operated for any significant length of time no energy consumption comparisons can be made with that system.

Control set point tests for the various operations have been carried out to a limited extent only. These points were determined partly through computer simulations of the system but mainly through observed results during operations. Optimisation of control set points will be performed in the future. Other more efficient modes of control for the solar harvesting are possible, but they have not been implemented at this stage for economic reasons.

No major control or operational problems were encountered with the new system. Most of the problems experienced have been in the monitoring and recording areas. This feature will not be required in normal commercial installations. Maintenance has not been much more than that required for a normal water cooled, chilled water system.

The control of the operation of a solar assisted cooling system could be greatly enhanced and its performance improved by the use of a dedicated computer. Although this may sound extravagant, the cost of such computers today and their frequent use in building energy management systems, make it quite acceptable.

During summer operation it was found that the new system provided a self-sustaining continuous supply of hot water. This enabled the solar chiller to provide continuous pre-chilling during air conditioning operational hours. During the recent winter operation, although the cooling demand was quite low, the general reduction in the levels of solar radiation enabled only a few hours of chilling at reduced capacities.

The above indicates that the total solar cooling load should probably be split between two solar chillers. One sized to cope with part of the minimum "base cooling load" expected under all circumstances and the other sized to cope with the remainder of the design solar contribution. Thus during summer both chillers could operate at maximum capacity to provide a high solar fraction. The "base load" machine operates alone during winter, but for prolonged periods and without any reduction in efficiency. In the cool season, if radiation levels are low and are infrequent it may be preferable to deactivate the solar plant as power consumption through pumps may exceed cooling energy savings..

Due to cost implications and space requirements the economic advantages of providing a hot water storage tank should be analysed thoroughly in view of the problems experienced at Garbutt. Storage tanks could help obtain higher solar fractions, but for hybrid systems it is not essential to achieve high solar fractions.

FIGURE 6

ELECTRICAL POWER CONSUMPTION FOR COOLING SYSTEM

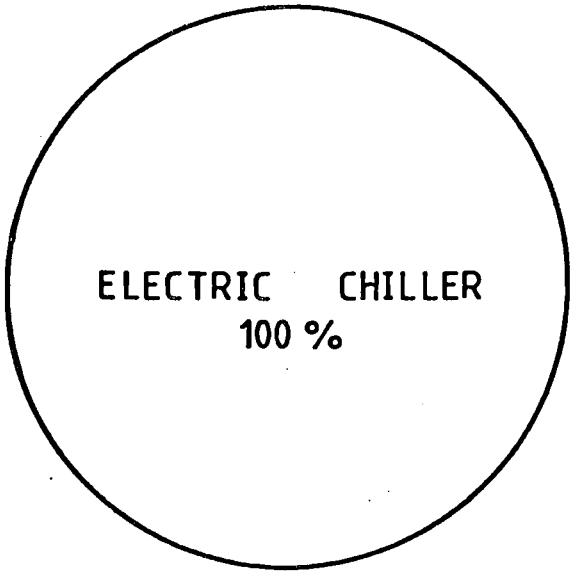

CONVENTIONAL OPERATION

(MEASURED PERFORMANCE.)
GARBUTT

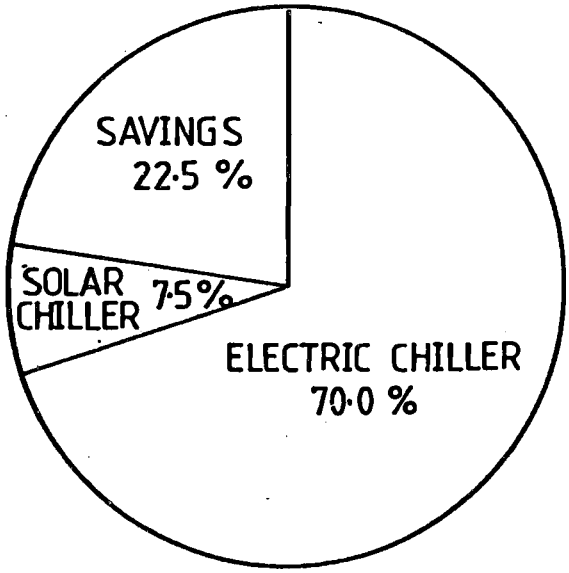

HYBRID CONVERSION

(PRACTICAL RESULTS.)
GARBUTT

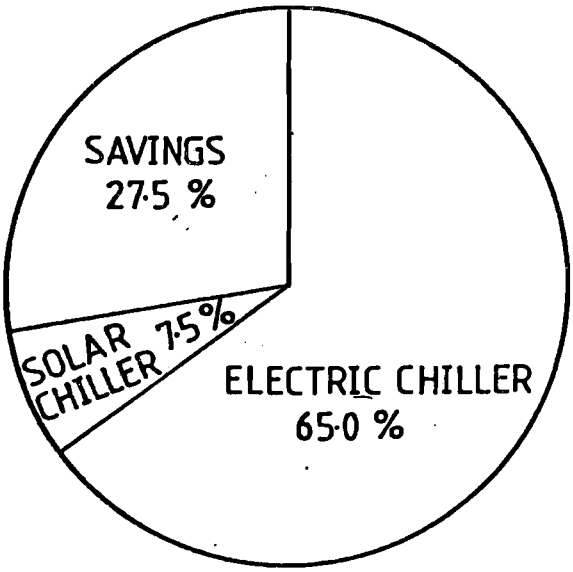

HYBRID CONVERSION

(EXPECTED MAXIMUM.)
GARBUTT

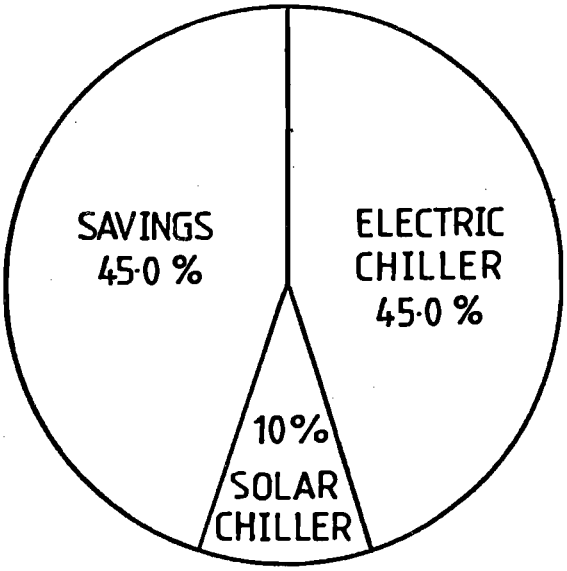

HYBRID SYSTEM

(EXPECTED FOR NEW DESIGNS

The monitoring of actual solar radiation levels and building cooling load profiles should give a clearer indication of the operation of solar cooling systems in practice. Estimated clear sky periods, which are used to predict the reduction in useful energy collection seems to give higher overall energy collection figures than that obtained at Townsville. This does not necessarily imply greater cloud cover periods as the cloud cover profile could be such as to reduce collection levels without an increase in the total cloud cover.

Sufficient information has been gathered to indicate that the new hybrid system at Garbutt, as designed, reduces total purchased energy for the cooling operation. However the energy savings are below that possible for such a system, due to unavoidable system inefficiencies attributable to the conversion of an existing system at minimal cost and the new maximum solar chilling capacity of only about 30 kw.

The comparison of energy consumptions based on data available is shown in fig. 6. The new system should reduce total purchased energy for cooling by about 23%. A new installation for the Garbutt Office, with the same type of system and equipment should be able to reduce energy consumption by about 40%. This coupled with the lesser capital cost of the hybrid type system should provide better economic returns.

Commercial research should be carried out along the basis of providing solar chillers which could operate with lower hot water temperatures as this would result in higher solar contributions and also allow the use of standard collectors.

Other areas of improvements eg., resizing of air handling coil etc., do exist in the plant. However, the scope of the alterations was limited to study the improvements due to the new solar operation and thus no other components were evaluated or changed at this stage.

9. DESIGN OF NEW INSTALLATIONS

The following guide lines should be considered when new solar air conditioning systems operating in the hybrid mode are designed.

The size of the solar component of the hybrid plant should be arrived at after economic evaluation for optimum solar contribution levels and acceptable pay back periods. This would significantly vary from location to location. For instance electricity cost in a remote location could be very high, indicating the desirability of a solar assisted system. However as the construction of a solar system is more labour intensive, it could result in a very high capital cost. Damage during transportation of the equipment could be a significant addition to the cost. Conversely electricity may be relatively cheap in a capital city although installation costs may be significantly lower.

In addition to this the effect of inflation, interest rates and fuel price changes need to be considered if genuine economic benefits are to be derived. Thus the selection of the level of solar assistance has to be carefully analysed with regard to the particular instance.

However, it is considered inadvisable to design solar assistance levels above about 60% to 70% of peak cooling load expected during operation. This will minimise additional capital expenditure. Levels of less than 20% should not be used as a small drift below expected efficiencies could easily render it uneconomical.

Positioning of plant components should be such as to reduce all pipe work to limit heat losses/gains. The piping configuration for the roof collector system should be such that the pressure drop through the collectors is large compared to the pressure drop in the supply header pipe. This will ensure a more evenly balanced flow through the collector system. A reverse supply header system should be used instead of a reverse return system to limit temperature drop in the solar hot water from the roof.

Flow of hot water to collectors should never be less than the flow to the solar chillers. Preferably it should be about 20% more to provide positive energy storage during operation of chillers and help stratification in storage tanks. This also implies that collectors should be oversized by about 20%. Additional oversizing may be required to compensate for the dust shading problems.

Dust accumulation on the collectors should be reduced in future installations by limiting the minimum slope of installation. As presently no other information is available a value of 15 deg. is suggested. This should still achieve necessary solar harvesting during summer.(However periodic cleaning of the collectors will still be required.)

Consideration should be given to the use of concentrating, tracking collectors instead of flat plate collectors. This would reduce storage requirements as the energy production is more matched to the cooling load profile of office buildings. This could also obviate the need for a storage tank.

A conventional chiller with good capacity control for reduction in energy consumption during reduced capacities should be used to supplement the solar cooling. The conventional chiller should be sized to meet the full cooling load of the building.

If multiple solar chillers were to be used, the hot water should never be by-passed to the bottom of the hot store, during a chiller shut down. Instead it should be recirculated in the pumping circuit to reduce the draw-off from the top of the store. This conserves the higher grade energy.

Any large scale storage of hot water should be separated from the normal operation tank. This permits use of smaller better insulated tanks for normal cloud cover operation and allows the size of the weekend storage tank to be determined in terms of economic benefits without affecting chiller performance.

A boiler should never be used to supplement heat energy as the high solar contributions necessary for the viability of a boiler are never attainable without prohibitive oversizing of collectors.

This brief is by no means sufficient to cover all aspects of solar air conditioning design. But the recommendations given above could reduce problems and capital cost in the design of a new solar air conditioning system.

10. CONCLUSION

The original exercise by the Department was, as stated earlier, to experiment with available technology for the provision of solar cooling in an office environment. This objective was maintained for the redesign as well. The incorporation of a programmable logic controller was simply in keeping with today's widely used technology. The operation of the previous system and the design of the new system has given significant insights for the future direction that the solar cooling technology and design philosophy should be taking.

It is clear that an energy conserving solar assisted airconditioning system could be provided using present technology. However, it is premature to predict its economic benefits. The present electricity rates and tariff structure in most parts of Australia make pay-back periods unrealistic. Research carried out by Chinnappa (Ref.3) indicates that although hybrid systems are the best available at present, minimum energy costs of 15c/kwh are necessary before pay-back periods could come within the life of the equipment. Even in locations where solar cooling is attractive it has to be noted that careful economic analysis and design are necessary if installation of a hybrid system is to be cost beneficial.

Finally, it is hoped that the waned interest during the past few years on solar cooling technology, after a bright upsurge a decade ago, will be renewed through the more promising results of this system and other types of hybrid systems presently undergoing tests.

ACKNOWLEDGEMENTS

The author wishes to acknowledge the assistance and advice of K. Thomas and A. Sag with regards to the solar cooling and V. McGrath for his contributions to the control system design.

REFERENCES

1. D. Langridge and P. McCormic - Solar Cooling, A Second Look. Preprint for Solar Energy Research Institute of Western Australia/ NERDDC, Solar Cooling Workshop, Perth, April 22nd-24th, 1980.

2. N. Chekalin and P. Jones - Solar Air Conditioning of an Office Building in Townsville - Journal of the Institute of Engineers Australia, December 1981.

3. J.C.V. Chinnappa - Solar Chilling Technology, 1981.

4. Various, Dept. of Housing and Construction internal reports of the solar air conditioning system in Townsville by P. Becker, P. Jones, N. Chekalin, K. Thomas and A. Sag.

5. Personal communications with P. Renton and Dr J.C.V. Chinnappa.

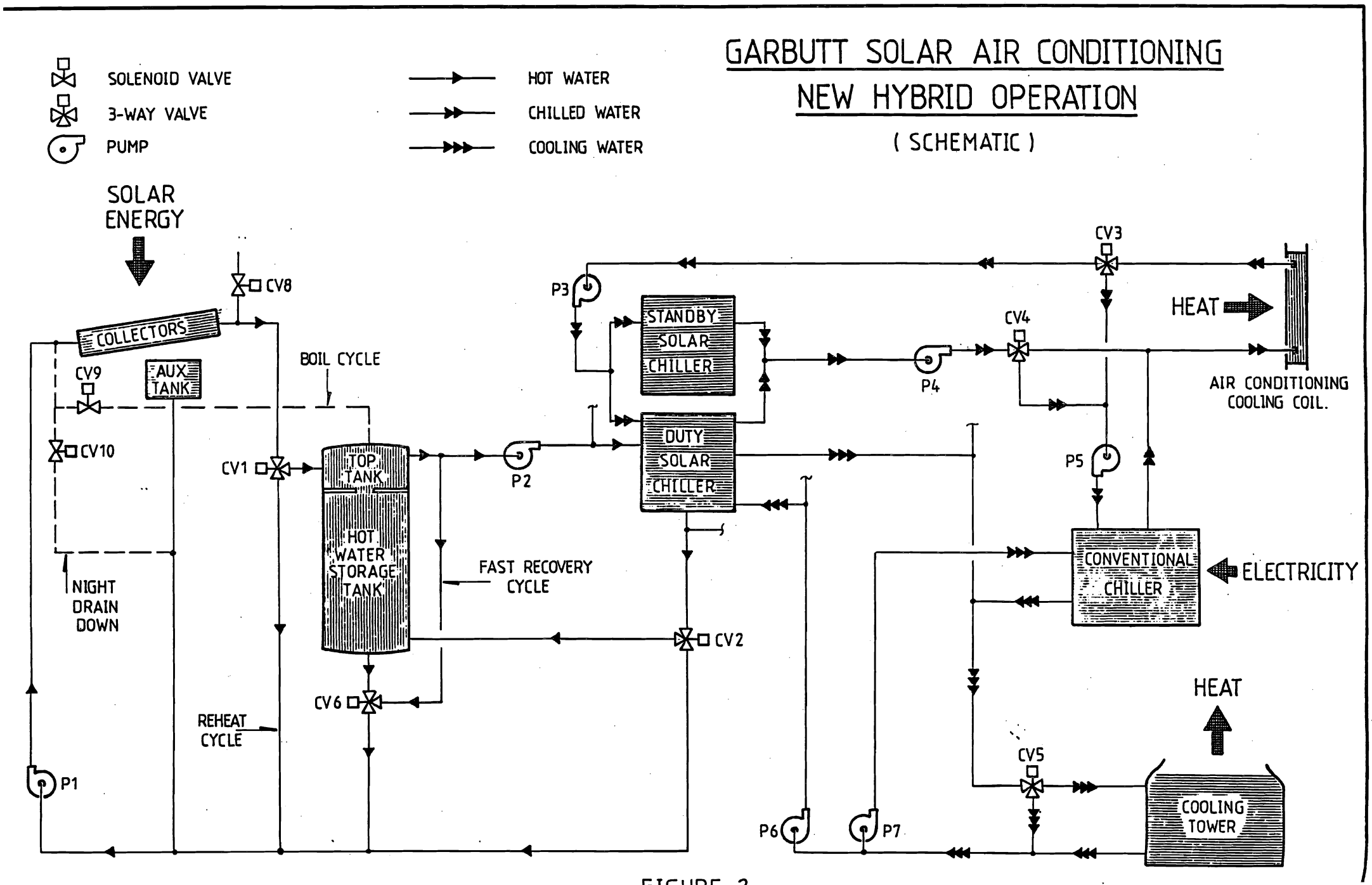
GARBUTT SOLAR AIR CONDITIONING
NEW HYBRID OPERATION
(SCHEMATIC)
SOLENOID VALVE
3-WAY VALVE
PUMP
HOT WATER
CHILLED WATER
COOLING WATER
SOLAR ENERGY
COLLECTORS
CV8
CV9
AUX TANK
CV10
BOIL CYCLE
CV1
TOP TANK
HOT WATER STORAGE TANK
NIGHT DRAIN DOWN
REHEAT CYCLE
CV6
P1
P2
FAST RECOVERY CYCLE
CV2
P3
STANDBY SOLAR CHILLER
DUTY SOLAR CHILLER
P4
CV4
CV3
HEAT
AIR CONDITIONING COOLING COIL.
P5
CONVENTIONAL CHILLER
ELECTRICITY
HEAT
CV5
COOLING TOWER
P6
P7

FIGURE 2

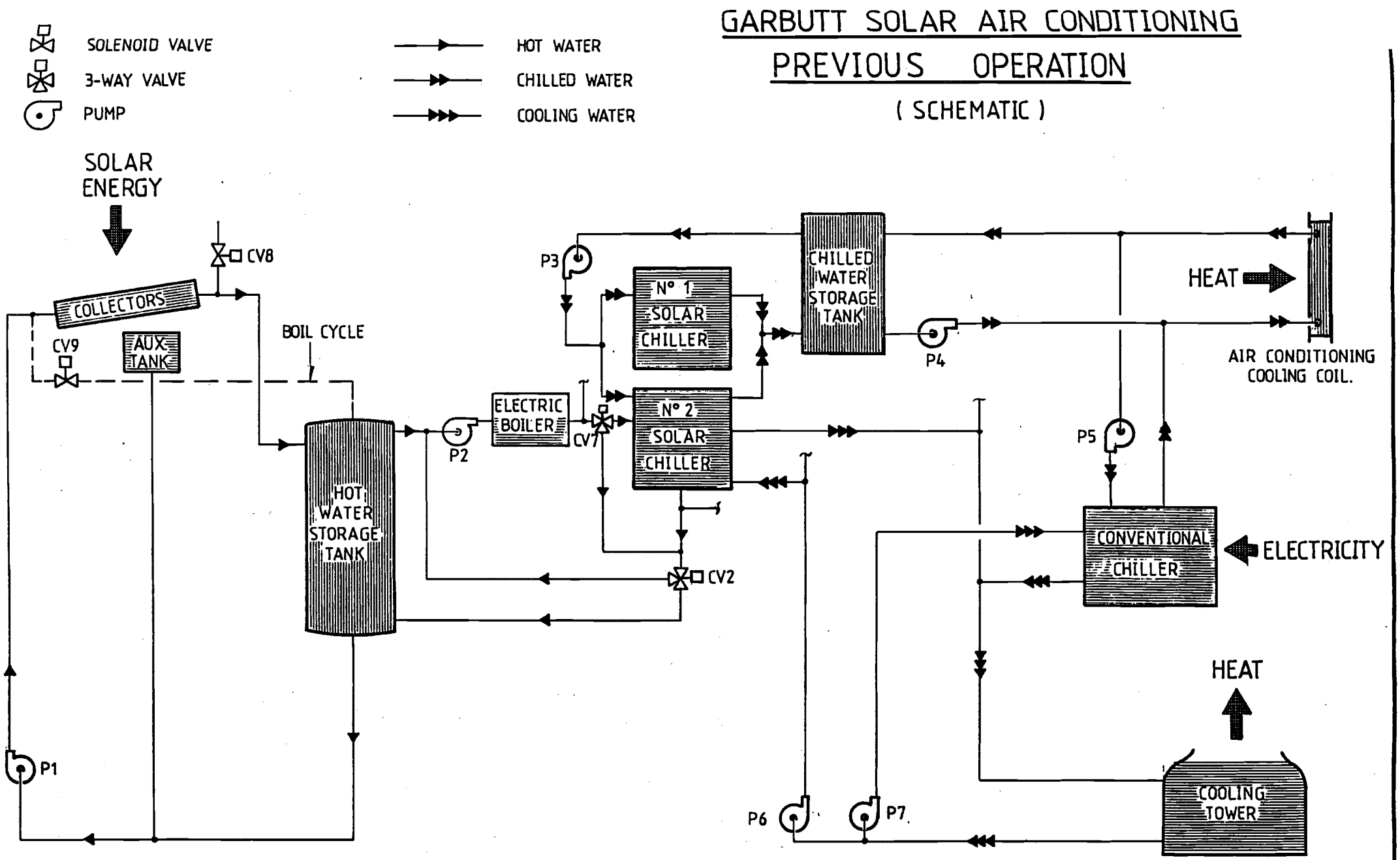
GARBUTT SOLAR AIR CONDITIONING
PREVIOUS OPERATION
(SCHEMATIC)
SOLENOID VALVE
3-WAY VALVE
PUMP
HOT WATER
CHILLED WATER
COOLING WATER
SOLAR ENERGY
CV8
COLLECTORS
CV9
AUX. TANK
BOIL CYCLE
HOT WATER STORAGE TANK
P1
P2
ELECTRIC BOILER
CV7
P3
N° 1 SOLAR CHILLER
N° 2 SOLAR CHILLER
CV2
CHILLED WATER STORAGE TANK
P4
HEAT
AIR CONDITIONING COOLING COIL.
P5
CONVENTIONAL CHILLER
ELECTRICITY
HEAT
COOLING TOWER
P6
P7

FIGURE 1

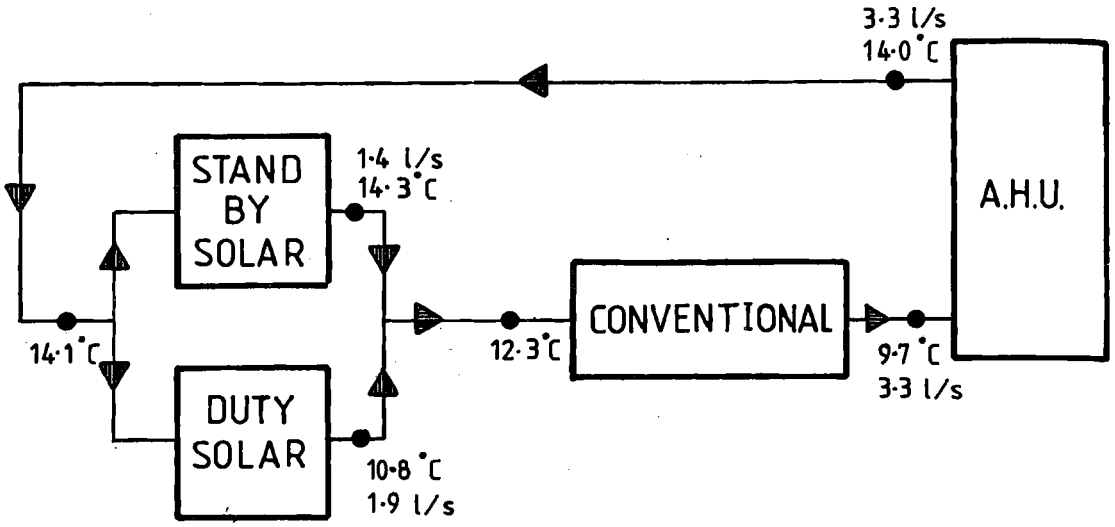

TYPICAL HYBRID OPERATION TEMPERATURES

FIGURE 4

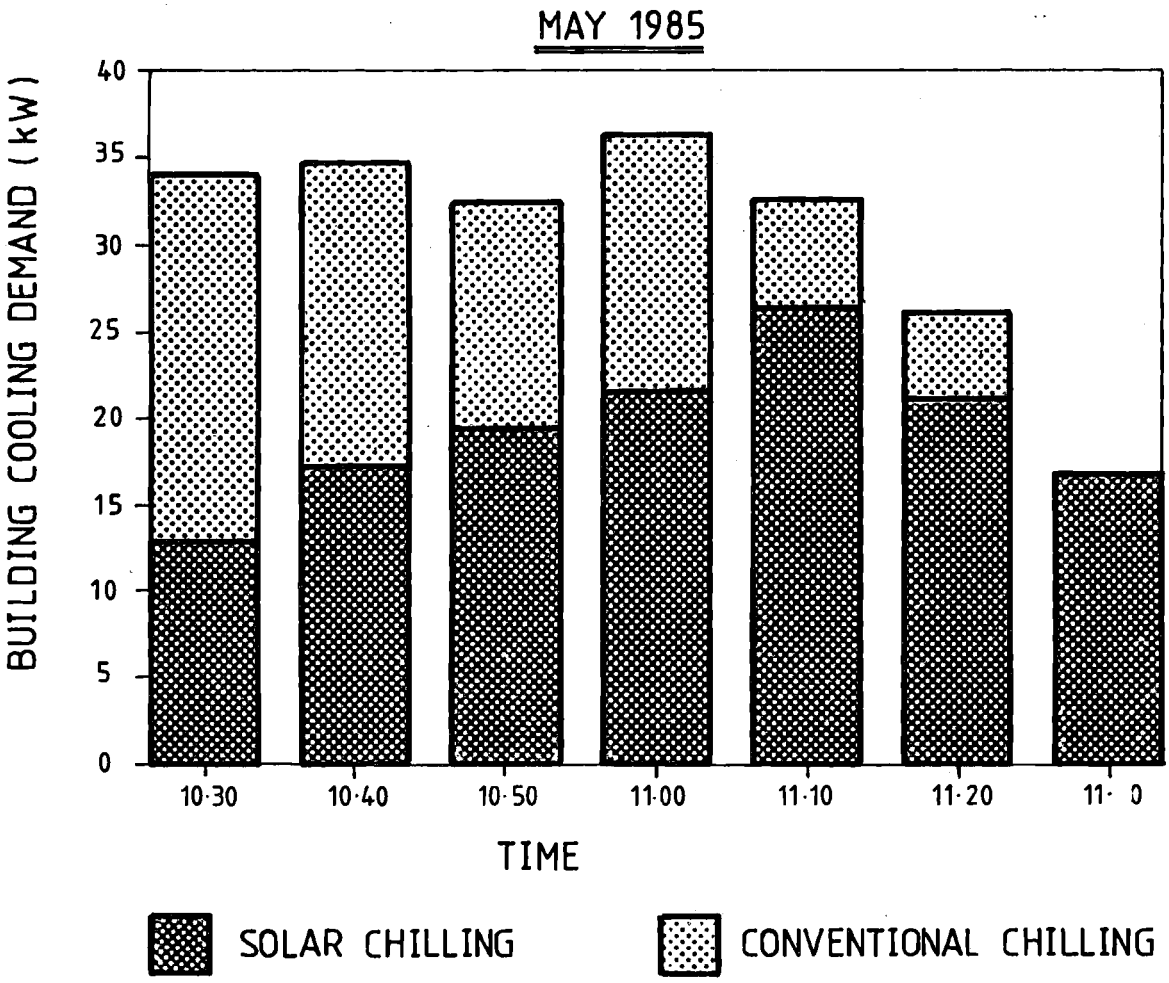

TYPICAL HYBRID COOLING LOAD DISTRIBUTION

FIGURE 5

RAW EARTH - THE NATURAL SOLAR SYSTEM

Mr B Young

Architect

RAW EARTH- THE NATURAL, SOLAR SYSTEM

an overview of traditional and modern design applications of raw earth (including mud bricks, pise) in Australia and overseas.

by

Bob Young, A.R.A.I.A.

Presented at-

A Symposium on Existing Technology for Renewable Energy Resources, Capricornia Institute, Rockhampton, Queensland, September, 1985.

RAW EARTH - THE NATURAL, SOLAR SYSTEM.

Raw, unbaked earth has been traditional to building since man first built shelter. In Europe it's recorded use dates back to the 3rd century B.C. and in North America to the Pueblo Indians in 700 A.D. This common, traditional building method is found on all continents, including Africa, Asia and South America.

Raw earth (earth wall) building is a solid, massive system and includes techniques such as adobe (mud bricks) and pise (rammed earth). Other methods are wattle and daub, cob and Cinva Ram (cement stabilized, with block press).

These methods all have certain features in common, including the use of naturally-occurring unbaked earth, sun drying and construction by hand. Because of the simple, low cost aspects of the method, it is ideally suited to the layman or owner-builder and the local craftsman. It's characteristics are sufficiently flexible , however, to allow the builder considerable creative expression, while at the same time satisfying structural and performance requirements.

In most respects, it is an ideal medium for low cost, stable and creative building, in complete harmony with the environment.

A further important attribute of earth as a building material is that due to it's relative density and massive nature (external walls are solid and generally minimum 300mm thick) it is an excellent thermal barrier against extremes of heat and cold.
Like stone, kiln dried bricks and other dense, masonry materials, the time lag between external and internal temperatures is considerable, thus enhancing interior comfort conditions.

A long time advocate of earth wall building, Egyptian architect Hassan Fathy points out "..the comfort of people inside buildings depends largely upon the thermal properties of the walls and roof. The best materials are those that do not conduct heat. Sun-dried brick is , fortunately, one of the poorest conductors of heat."

Fathy designed an entire town of mud bricks at New Gourna in the Nile Valley in the 1940's, which was largely constructed by local craftsmen and villagers on a self-help basis. He also incorporated architectural devices such as 'wind catches' and shade 'loggias' which were derived from local traditions and were a response to the hot, arid climate.

Closer to home, an Australian researcher into passive building design, J.W. Drysdale, studied climatic patterns during the 1940's and 50's. His finding were similar to Fathy's in respect of the behaviourial differences between heavy weight systems (eg. mud brick, stone) and lightweight frames (eg timber). Other areas of interest to Drysdale included the relationship between buildings and solar orientation, shading devices and natural ventilation.

Recent research work both in Australia and overseas appears to have borne out the logicality of principles espoused by pioneers such as Fathy and Drysdale. It is now a fact that traditional, time-honoured practices such as adobe and pise are inherently passive by their nature. And they do not generally depend upon active solar hardware and high technology systems to ensure minimum interior comfort conditions.

As a general rule, provided simple design guidelines affecting siting ,orientation and detail aspects are adhered to , there is no reason why earth wall structures should not behave as effective environmental modifiers. An added bonus is the satisfaction derived through the creative, self-help building process and the natural warmth, attractive color and texture offered by the finished walls.

In addition to passive solar properties of earth walls, they also have excellent acoustic and fireproof performance characteristics. This makes them ideal for internal, load-bearing partitions and for fireproof external walling in bush fire risk areas.

Suitable soils for earth wall construction are generally found in most parts of Australia, with clay being an essential component. Facilities for soils and brick tests are located at the Experimental Building Station at North Ryde in Sydney and at several other centres throughout the country.

In practical terms, mud bricks are generally moulded by hand on site, although machine made bricks are becoming popular in some areas. Pise (rammed earth) is also becoming popular, particularly in Western Australia, where an entire industry appears to have emerged.

Costs for this type of construction are comparitively low, being largelydue to the higher labour input. Costs can vary considerably, depending on the site, design complexity and the type of system chosen. As a rough guide, a typical range is between $150-$350 per square metre, with the lower figure representing the owner builder end of the spectrum.

Experienced earth wall builder contractors, particularly in the mud brick field, are at present operating successfully in areas such as Eltham in Melbourne and Gosford and the Blue Mountains, near Sydney.

Local Councils generally support and approve the technique. In the Sydney region, there have not been any recent cases, to my knowledge, where building applications have been refused. Conditions are sometimes attached which may require soil testing and certificates as to structural conformity may be called for. These requirements do not appear to have been undue cause for concern, however.

It is understood there is a growing interest in raw,earth wall building in Queensland at the present time and that a number of projects are either completed or are underway. Stabilized earth block houses are also apparently in evidence.

It is sincerely hoped these responsive, innovative building methods will continue to flourish in Queensland, since one must agree there will always be room for appropriate, low cost materials and methods which effectively respond to and modify environmental and climatic extremes to the benefit and comfort of building users.

Thank you.

Bob Young, A.R.A.I.A.

References:

. J.W. Drysdale, Dept. of Housing and Construction, Experimental Building Station, Bulletin No.6."Designing Houses for Australian Climates", A.G.P.S.,1975.
.Hassan Fathy, "Architecture for the Poor", The University of Chicago Press, 1973.

EARTH INTERGRATED BUILDING (IN-GROUND)

Dr K Prescott

Architect

EARTH INTEGRATED BUILDING (IN GROUND)

KERRIE PRESCOTT 5 HUET ST, ROCKHAMPTON, Q4700

INTRODUCTION

In recent years there has been a surge of interest in underground and earth-integrated building practices, particularly in the United States of America. This interest comes mainly from a concern for energy conservation and the wastefulness of fossil-fuel powered heating and cooling systems used for controlling the internal environments of modern buildings. The financial savings that can be enjoyed due to the energy-saving qualities of an in-ground building, rather than a conventional above-ground building, have been well documented by many advocates of this form of architecture.

Other motives for building earth-integrated structures are: reduced external maintenance, and therefore running costs; functionalism, such as inner city carparks and railways; audio and visual privacy; security from vandalism; storm, earthquake and bushfire protection; preservation of space in congested, or ceremonial areas; and environmental and aesthetic reasons. It is interesting to note that a survey carried out by the Department of Architectural Extension, Oklahoma State University, that questioned owners of underground houses in nine states of North America, out of 12 choices the most important motive behind the purchase of an underground dwelling was the low running costs of heating and cooling, while the factor of land preservation was least important (1). However the primary motivation towards earth-covering in Australia appears to be the aesthetic and landscape integration capabilities of the concept, with the thermal, low maintenance and security aspects following in priority (2).

The pressures that have initiated research into underground architecture and other forms of passive-solar design in other `western´ countries do not exist to such an extent in Australia because of the comparatively low population density and the apparently plentiful supply of natural resources. Neither is open space considered to be in short supply. However, improvements in the aesthetics of the environment, and thus the quality of life-style, in Australian cities and surrounding suburbs, could be achieved by the large introduction of passive solar, earth-integrated architecture.

There are reasonable arguments for economy-tempered design for a personal facility such as a house, as is claimed in literature, but consideration for life-cycle costs should be shown in the case of public buildings that use a community´s finances and large amounts of energy.

Terminology

In this paper `underground´ is a general term used to describe a space or building that is below the natural and/or modified ground level. Thus it includes both excavated spaces (below ground) and those built level with the ground surface at the lowest entry (e.g., dug into the side of a hill), as well as naturally occuring spaces. The synonymous term `geotecture´ is often used in literature and is derived from geo (Gk) `the earth´ and tecton (Gk) `builder´.

Earth integrated refers to buildings that are directly coupled with the earth temperature cycle but do not necessarily have earth-covered roofs, while earth-covered refers to buildings with earth on the roof but not necessarily against the walls. Earth-sheltered is used to describe a building that uses earth to protect it from climatic extremes or environmental hazards. Thus it includes all geotecture, as well as structures `sheltered' behind earth berms, with limited earth contact.

Advantages of Earth-Integrated Buildings

Underground buildings can be sited almost anywhere that above-ground buildings can be located, from steep hillsides to flat terrain. Constructed by the `cut and cover' method, the roof, wall and floor elements are separated from the enclosing soil by a protective waterproof membrane.

Properly designed earth-integrated houses have proved to be the most energy efficient of all passive-solar, energy-effective building types. They are oriented to optimise the benefits of solar thermal energy; they are constructed so that sunshine enters (or does not enter) the building when required, depending upon the season. All habitable rooms have windows (generally with a view) and because they are designed using correct solar principles, many earth-covered houses provide better conditions of natural light and dust-free ventilation than conventional above-ground buildings (3).

As most of the outside envelope of an underground building is protected from the damaging effects of the sun, and some of the normal building components (such as rainwater gutters, downpipes, and most external finishes) are eliminated, the time and costs involved in on-going maintenance are considerably lowered. Further, as the roof and walls are not exposed, there is increased security against vandalism and external threats such as storms, cyclones, lightning strike and bushfires.

THE EARTH-TEMPERED BUILDING ENVIRONMENT

Thermal comfort conditions within a building are affected by air temperature, air movement, relative humidity and surface radiant conditions, i.e., amount of heat absorbed and/or re-radiated by a specific surface. `Heat loss (or gain) from a structure principally depends on two factors: the ventilation load for heating or cooling intake air, and the heat transmission through the building envelope'(4).

Heat Transmission in an Underground Building

Although earth itself is not a good insulator, the thickness of earth-covering on walls and roof increases the thermal resistance of these structures, i.e., resistance to heat transfer through the structure. Also, heavy wall and roof elements are generally necessary to support the weight of earth and this often calls for the use of reinforced concrete as the structural medium, the mass of which increases the overall resistivity of the structure. The high thermal mass of an earth-coupled building and the

surrounding earth provide a heat sink which is an important natural thermal control. The thermal mass of a structure is a function of the density and quantity of the building materials in combination with the ability of those materials to store heat.

There is a fluctuation in the direction of the heat exchange between soil and building, and this is called the `charge - discharge´ cycle (5). In the summer, the internal thermal conditions of the building are such that heat will flow into the surrounding cooler ground or heat sink, thus `charging´ it with heat energy, while cooling the building. In winter, when the temperature of the air which comes into the building is lower than the surrounding earth, heat will `discharge´ back into the space.

In a cold climate heat absorbed from the air, will be stored in this `heat sink´ and `released´ into the internal space when there is a net heat loss. Conversly, in a hot climate, if the earth temperature is lower than the internal air temperature of an earth-integrated building, heat will flow from the space into the surrounding earth. A conventional building on the other hand, unless super-insulated or artificially thermally controlled will be more directly exposed to air temperature changes than an underground building because of its lower thermal mass, and hence low thermal storage capacity.

The great advantage of earth-covered construction is the capacity of soil to slow down and damp temperature fluctuations on both a daily and seasonal basis. Studies of soil temperature at various depths indicate that at a certain depth, depending on the characteristics of the soil, these fluctuations are virtually eliminated.

During the day, the surface temperature of the earth increases with absorbed solar energy, from direct penetration of the solar beams plus diffuse sky radiation, until the rate of heating is equal to the rate of heat released to the atmosphere at the surface. (Typically, on a horizontal surface, the proportion of diffuse solar radiation received varies from a minimum of about 10 per cent (from a clear blue sky) of the total radiation reaching the surface, to 100 per cent when the sun is obscured by cloud (6)). With the lowering of the incident angle of the sun´s radiation, i.e., after noon, more heat is released to the atmosphere than is absorbed, with the result that the surface of the earth begins to cool. When the surface temperature is lower than the deep soil temperature, heat will move upward and dissipate at the interface of earth and atmosphere (7). Heat is lost throughout the night, particularly if the sky is cloudless or if there is a wind. When the sun begins to warm the earth´s surface again, the rate of heat upward is slowed until the heat conduction is reversed.

The rate of heat flow in a particular soil is dependant upon the thermal conductivity (which is related to soil temperature, density, water content, chemical and other factors) as well as the depth. Figure 1 below (measurements taken in Mineapolis, United States of America) shows that daily temperature fluctuations are reduced with increased soil depth and are virtually eliminated on that particular test site at a depth of 200 mm.

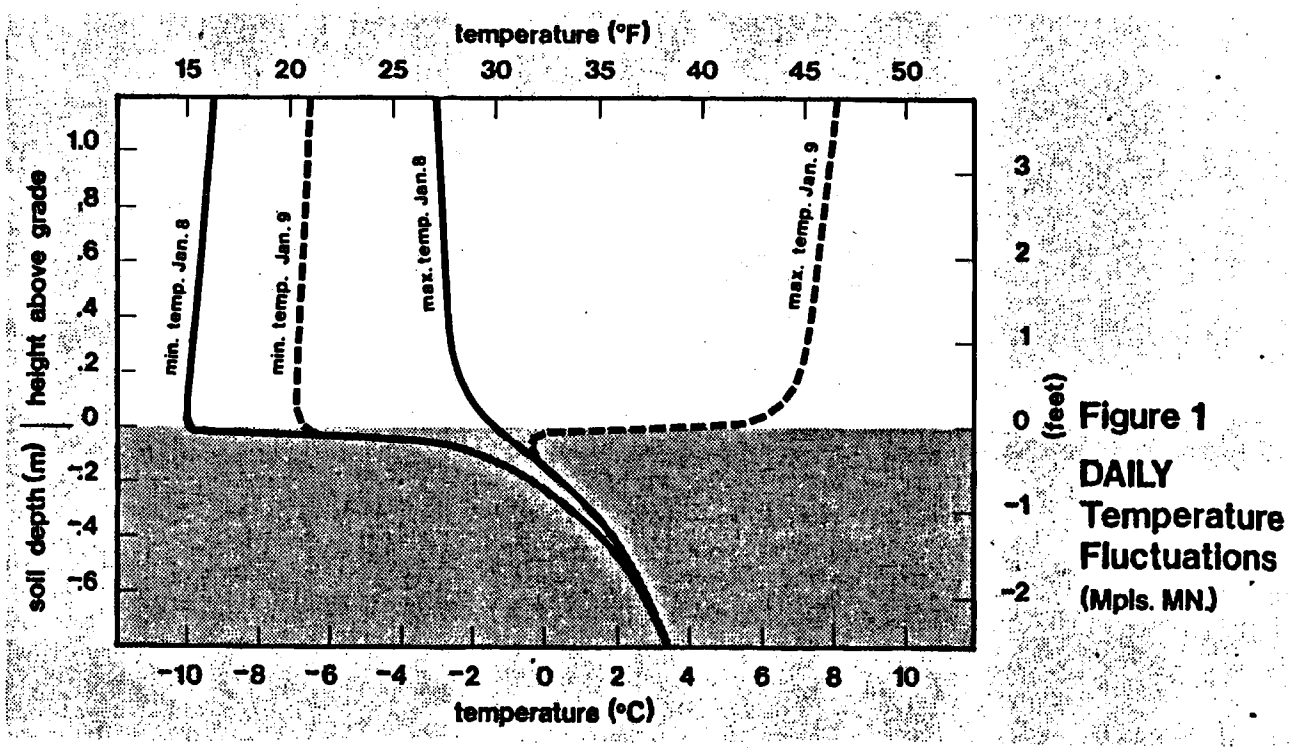

FIGURE 1

Typical Daily Temperature Fluctuations

in Mineapolis, U.S.A.

The pattern of daily temperature changes as described above is similar to that experienced on an annual basis. It can be shown graphically as a sine curve, the axis of which is equal to the average annual ground surface temperature. Figure 2 below illustrates temperature readings taken at one metre depth at Trangie Metoerological Station, New South Wales. These have been extrapolated by computer to give annual temperature curves for various soil depths at the same site. Dr Syd Baggs (University of New South Wales) has calculated similar ground temperature data for over 60 sites in five states of Australia, not including Queensland.

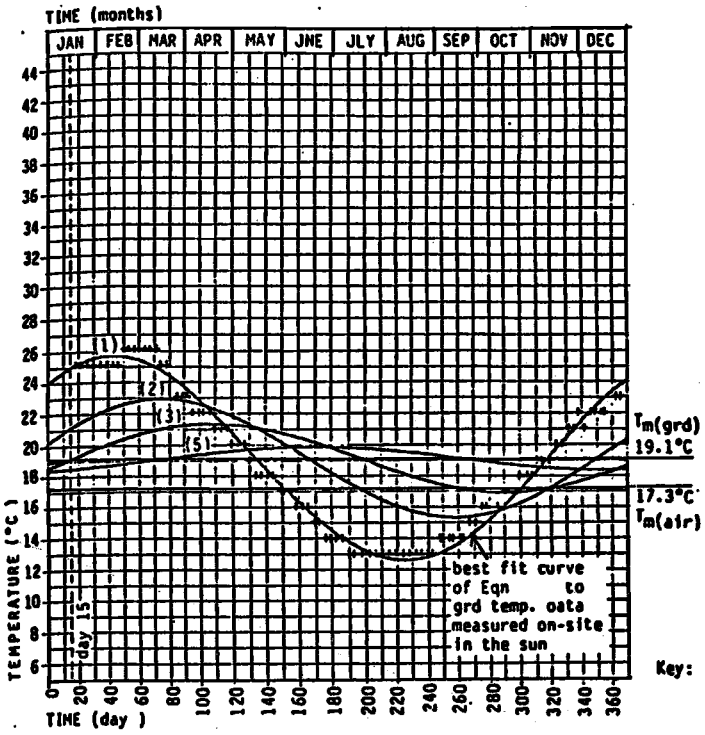

FIGURE 2
Periodic Annual Ground Temperature at Trangie, N.S.W., and 'Best Fit' Curve of Equation.(9)

Key: + = Annual data array measured on-site
x = 1 00 cm
(1) = 1 00 cm depth ground temperature wave. 'Best fit' (least sq.) of Equation to data array with standard deviation of 0.57 K,
(2) = 2 00 cm, (3) = 3 00 cm, (5) = 5 00 cm

As can be seen from Figure 2 above, the amplitude of the temperature range is decreased with an increase in soil depth. As well as this effect, soil cover causes a time lag of earth temperature peaks from those of the environmental air temperature above ground. These capacitive insulation effects of soil are together referred to as the 'thermal - flywheel' effect (10) and are illustrated in Figure 3 below.

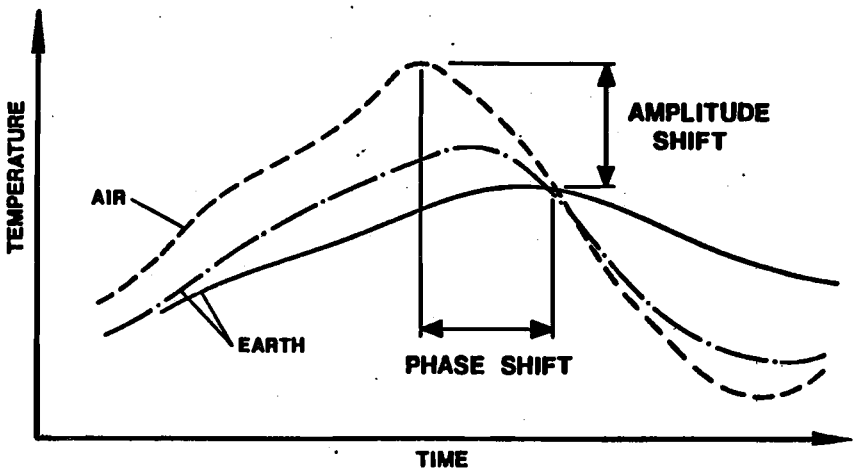

FIGURE 3

Amplitude and Phase Shift Phenomena between

Air and Earth Temperatures (10)

The long term result of these phenomena is that given sufficient depth of soil, the overall heat gain from summer is slowed in its passage through the soil and thus a dwelling below ground surface theoretically received heat from the ground in the early winter months. Conversly, the cool temperatures of winter are delayed by soil cover and affect the building in early summer. At this time the cool earth surrounding the underground building becomes a `heat sink´, i.e., heat will flow from the high internal temperatures, due to warm atmospheric temperature, to the cool earth.

An example cited by Dr Baggs refers to a correctly-designed, earth-covered house with a roof cover of 2 metres of well-structured, clay-soil. He states that the roof of the building would be affected by a summer heat wave 50 days after the atmospheric effect, and the heat would take 130 days to reach the floor level at a depth of 5 metres. This means that the soil temperature surrounding the house changes three and a half to four months later than the change actually occurs in atmospheric temperature. Thus cool atmospheric conditions in August would result in cool earth temperatures in December when cooling within the house would probably be required, particularly in Queensland.

The Mair house near Lake Eacham on the Atherton Tableland, North Queensland, is reported to have an internal temperature range of 16 degrees to 22 degrees annually, while external temperatures can range between 2 degree and 40 degrees. This house has an average soil coverage of 450 mm (Bob Mair, priv. comm.).

Local Earth Temperature Conditions

Figure 4 below shows the results of a short test taken over one day at Blackwater. The average air temperature in the control caravan was 27.8 degrees C while the average temperature of the soil at 1 metre depth was 28.1 degrees C. The earth´s damping effect on the amplitude of temperature fluctuation can be seen by the smaller area under the earth temperature curve compared to the area under the air temperature curve.

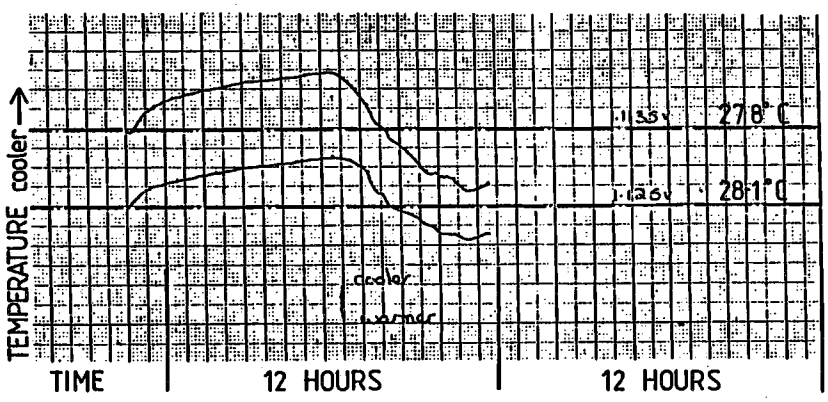

FIGURE 4

One Day Temperature Test Inside Control

Caravan and at 1 m Soil Depth

Soil temperature data was also collected by the Department of Primary Industries at their Biloela Research Station, 104 km south of Rockhampton. Table 1 below shows monthly average temperatures at various soil depths compared to the monthly average air temperature.

TABLE

Average Monthly Temperatures in Degrees C for Air and Various Soil Depths at Biloela

	1982										1983		
Month	. Mar.	Apr.	May.	Jun.	Jul.	Aug.	Sep.	Oct.	Nov.	Dec.	Jan.	Feb.	Mar.
Air Temp.	25.5	22.2	18	12.1	12.5	15.7	19.6	19.9	24.3	26.2	26.6	26.5	25.1
Soil Depth													
10 cm.	26	23.2	18	13	12	15	18.1	20.8	26.9	26.8	27	28	26
50 cm.	27	25.6	21	17	15	17	20	22.4	27.8	28	28	30	27
75 cm.	28	26.9	23	19	17	18.5	20.9	23.2	27.8	28.7	29	31	28.5
100 cm.	28	27.4	25	21	19	19	20.8	22.4	25.7	27.5	28	29	28.7

The type of soil in which these readings were taken is known as `Callide aluvium´ and is very similar to the alluvial soils found in the Yeppen flood plain and other areas around Rockhampton (11). It was noted during research that the surface temperature of soil reacts to air temperature changes more rapidly than does the deep soil temperature.

Combining these average soil temperatures with the average maximum and minimum air termperature of the area, the graph shown in Figure 5 was constructed. The `best fit´ curve joining these temperatures illustrates the earth´s damping and time lag effects at various depths for the test site.

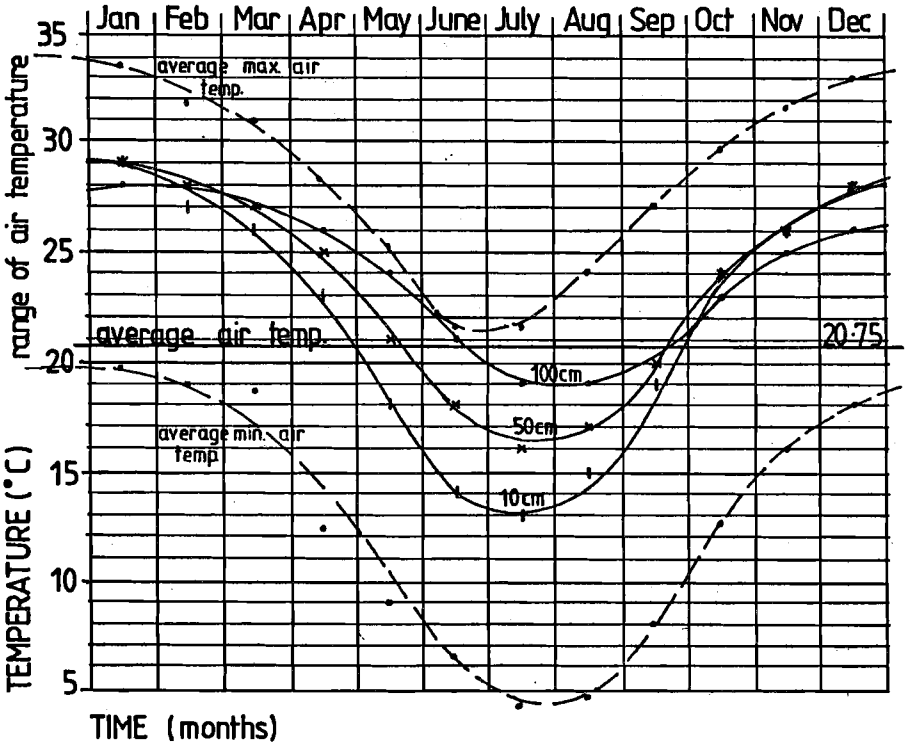

FIGURE 5 Periodic Annual Ground Temps at Various Depths at Biloela, and 'Best Fit' Curve.

Ventilation in Earth-Integrated Buildings

In an underground building the ventilation load from uncontrolled infiltration of outside air is limited to the vicinities of door and window openings if all walls and the roof are covered with earth. Some traditional building techniques in Australia, and particularly in Queensland, do not produce air-tight building envelopes. This is especially the case with timber construction where different materials and components are joined. For a fully heated house in Southern Australia, drafts and air leaks can cost the occupant of a house more than $1.00 per day in heating bills (12), while in Queensland, the cost of space cooling through air-conditioning is affected by the infiltration of warm air.

The procedure of earth berming against walls, or that of earth-covering a roof, results in a very effective blanket against air leaks being formed. Also, as in conventional construction, as wall thickness increases, hence as the mass increases, between the internal and external environment, so the amount of heat loss decreases. On exposed sites, an increase in wind speed can increase the heat loss accompanying ventilation and decrease surface resistances of materials. An insulative layer of still air surrounds all rough-surfaced objects, but the thickness of this layer will be reduced in turbulent air conditions. Wall surfaces, like exposed skin surfaces, loose heat to cold air more rapidly if there is air movement, than in still air. In winter, for a conventional brick above-ground building, an increase in energy consumption of up to 20 per cent is possible in areas of high wind. Therefore, earth-covering can reduce undesirable heat loss or gain through air infiltration and lowered surface resistances caused by wind, especially when coupled with effective vegetation growth.

However, for human comfort, some air movement is required; particularly in hot climates, stagnant conditions can produce adverse odour, moisture and temperature conditions. In the humid tropics, air speeds inside a house of 90 m/min during the day, and 60 m/min at night (14) are recommended.

Where natural ventilation is to be employed, the location and type of inlets (in relation to prevailing winds and orientation factors) determine the air flow pattern through the building. A high ratio of outlets to inlets in terms of size, will facilitate the air flow within a building, due to external venturi effects. Any change in direction within the building will retard the airflow.

If, for certain design reasons, ventilation through openings in the walls of the building is undesirable, breezes can be created by the use of air scoops as in some Middle Eastern communities, or by ventilating chimneys. A revolving vane on top of a chimney or vent outlet can turn the opening away from the prevailing breeze to accentuate suction of warm air out of the building. Similarly, vanes could be used to turn air scoops toward the wind.

Convectional movement of air can be encouraged by the use of cooling tubes within the ground, and chimneys or ventilating skylights to allow warmed

air to disperse upward. However, `solar chimneys´ will work most efficiently when the outside air temperature is high, thus drawing hot air into the building, and least efficiently when it is cool outside. Mechanical fans could be incorporated into this passive system to ensure functioning when the temperature difference between inside and external air is not great enough for natural convection to take place.

Where air conditioning is required in a building for heating or cooling or controlling humidity, a below-ground building will have greater efficiency than its above ground equivalent, as the correct air speeds and volumes can be catered for without having to make allowances for air leakage and infiltration.

Vegetation

A final consideration in the thermal efficiency of earth-integrated and earth-sheltered buildings is the effect that vegetation has on the heat transmission. Trees and shrubs on top or beside the underground building can be used for sun and wind control (redirecting or blocking entirely). They also offer surface shading which reduces the ground temperature and therefore less heat is absorbed. Dense grass acts as an insulation layer by trapping air under the foliage and also reduces the effect of wind on the earth surface.

Transpiration of plants, i.e., cooling by release of moisture, is a natural evaporative cooling system. Measurements have shown that on a summer day, where the air temperature may be 32 degrees C, a grassy surface will reach only 40 degrees C while an asphalt surface can exceed 60 degrees C (15). This suggests that roof gardens would help reduce temperatures even in conventional above-ground buildings.

We must recogize that the manmade environment is a sub-set of the natural environment, and that we are dependant on the natural environment completely for our existance. If we can learn to flow with nature, use its natural cycles to our advantage without disrupting them, then our living environment will become more viable and stable, and could then support us indefinately.

James Scalise.

REFERENCES

1. Boyer, Dr Lester, Lecture notes, Oklahoma State University.

2. Baggs, D.W. 1983. Australia's first passive solar earth-covered dwellings. Proceedings of the First International Earth Sheltered Buildings Conference, Sydney. p.p. E2-E8.

3. Ibid.

4. The Underground Space Centre, 1978. Earth Sheltered Housing Design, Van Nostrand Reinhdd Co., U.S.A.

5. Boyer.

6. Bugler, J.W. and Sullivan, A.D. 1977. A Solar Energy Handbook for the Rockhampton Region. Capricornia Institute of Advanced Education, Rockhampton, Qld.

7. Baggs, S.A. and Baggs D.W. 1983. An Introduction to Earth-Covered Housing. Ecasystems, Sydney.

8. The Underground Space Centre, 1981. Earth Sheltered Houses, Plans and Designs. Van Nostrand Reinhold Co., U.S.A.

9. Baggs, S.A. 1981. Earth-Intergrated building and earth-covered bulidings for Australian conditions. Physical Environment Report PR9, University of Sydney.

10. Boyer.

11. Duffy, B. D.P.I. Rockhampton, Private communication.

12. Ballinger, J.A. 1979. Solarch Handbook for the Thermal Design of Buildings. University of New South Wales.

13. Ibid.

14. Kukreja, C.P. 1978. Tropical Architecture. Tata McGraw Hill Publishing Co. Pty. Ltd., New Delhi.

15. Fry, M. and Drew, Jane, 1964. Tropical Architecture in the Dry and Humid Zones. B.T. Batsford Ltd., London.

Further Reading

Baggs, S.A., J.C., and D.W. 1985. Australian Earth-Covered Building. New South Wales University Press, Sydney.

La Nier, R. 1970. Geotecture: Subterranean Accommodation and the Potential of Earthworks. Indiana.

Scalise, S.W. (Ed.) 1975. Earth-Integrated Architecture. Arizona State University, U.S.A.

Wilkin, M. Solar Energy for Australian Homes. Project Publishing, Sydney.

SOLAR POWER SYSTEM DESIGN METHODS

Dr N F Teede, Mr D Kuhn, Mr I Muirhead,

Telecom Australia Research Laboratories, Melbourne

SOLAR POWER SYSTEM DESIGN METHODS

by

N. TEEDE, D. KUHN, I. MUIRHEAD

ABSTRACT

Three photovoltaic power system design methods based on mean annual, mean monthly and daily radiation data models are examined. Experience with the most detailed daily data simulation method has highlighted a number of shortcomings of the two simpler design methods. Changes in the design parameters for the annual and monthly mean models are proposed which facilitate the design of reliable, low cost photovoltaic power systems.

"SOLAR POWER SYSTEM DESIGN METHODS"

N.F. TEEDE, D. KUHN, I. MUIRHEAD

1. Introduction

Design methodologies for power supplies relying on renewable resources such as solar are almost as numerous as the number of designers or the end uses for which such supplies are designed. This paper addresses the sizing of a solar array/battery storage power system by three different approaches with increasing degrees of sophistication. While these methods are not the only approaches available, they cover elements common to most design approaches and each has its particular use.

The first method is a "Back of a postage stamp" type of calculation in which the mean annual load is matched to the mean annual insolation that is typical of the system location. The second approach uses this system size as a starting point and iteratively adjusts the array size on a monthly mean data base so that seasonal variations are taken into account. The third method relies on daily insolation data taken over several years and allows the optimisation of the battery and array size to provide a specified degree of power availability at minimum cost.

This latter method is necessarily computer based and may be more sophisticated than is necessary for many design needs. However, it does highlight some of the shortcomings of the sunpolar annual and monthly mean methods.

Following an outline of the mean annual, monthly and daily insolation simulation methods, consideration is given to the common balance of system (BOS) design for the remainder of the system.

2. Solar Power System Dimensioning

The generic system design that is considered in this discussion is shown in Fig. 1. The generalised system comprises a photovoltaic array, a regulator to shed part of the array current when necessary, a battery storage bank, an inventer if A.C. is required and a load which can be defined in terms of total daily energy requirement.

The designer is presented here with procedures for sizing the various components that will play an integral part in satisfying a given load demand.

Common to all photovoltaic systems design methods is the need for local radiation data falling on the inclined plane of the array. Global radiation data is available for some forth Australian locations. These values are listed in Ref.1 together with tabulated factors and also analytical methods for the transformation to the inclined plane of the array.

The output of a solar module is specified in terms of its rated power, current and voltage for a $1kW/m^2$ irradiance at a nominal operating temperature. The output from a module may be calculated by multiplying the rated output by the radiation level relative to $1kW/m^2$. In practice it has been found that for a battery charging solar power system it is more appropriate to size the system in terms of current rather than power because current output is less temperature sensitive and amp-hours in and out of the battery are more relevant than watt-hours since the voltage varies. The output in terms of amp-hours is given by:-

$$I_O + K \; I_D \, R_D \qquad (1)$$

where I_O is the daily output in amp-hours
I_D is the rated peak current
R_D is the mean daily radiation in MJ/M^2 day
$K = K_1, K_2, K_3$. K_n is a factor accounting for the various component efficiencies and loss factors defined with typical values in appendix 1.

Given that the load, expressed as the mean daily demand in amp-hours at a given voltage, is to be supplied by the array output, Eqn 1 can be transposed to size the peak array current given by:

$$I_D = \frac{I_O}{I \, R_D} \qquad 1(a)$$

I_D, together with the load voltage requirement then determines how the modules are to be interconnected and the total number required for the array. This is examined in more detail in Appendix 2.

Three different methods of proceeding with the sizing of the array are outlined below. Depending on the degree of sophistication/reliability required, the array may be sized according to mean annual, monthly or actual daily radiation data models.

2.1 Mean Annual Designm

When the mean annual radiation and load are used, Eqn (1a) gives the peak current array size required. The value of K in this case must include estimates accounting for variations both in load and radiation levels over the year. In that it makes no attempt to match the load and radiation levels, it is at best a primative approximation. The use of the mean annual data method is most useful where there is a very large storage, e.g. for water pumping to a storage dam. Alternatively Eqn. 1 may be used to calculate the annual solar contribution to a hybrid supply from a given array size. The K factors accounting for load and insolation variations would be set equal to unity in the latter case.

2.2 Mean Monthly Design

The sizing method based on monthly radiation data allows the seasonal load and insolation variations to be more realistically accounted for without necessarily having to resort to computer calculation. The method takes the approximate size calculated by the mean annual method ($K_9 = K_{10} = 1$) and, using Eqn. 1, simulates the performance on a monthly basis noting the excess or deficit between the output and the load.

If the system uses a significant size of battery storage (for example twelve to fifteen days mean load supply) and is allowed a mean discharge level down to say 50% capacity, then the excess or deficit can be accumulated in the battery. The calculations are continued for each month until the net storage level drops below 50%. The array size is then incremented and the calculations repreated until the array, together with the chosen battery size, will supply the load over the twelve months of the year.

A computerised version of this method (Ref 2) has been used successfully to size arrays for remote telecommunications installation in Australia and is a reasonable design approach for most installations. There are, however, an increasing number of applications where, because of the larger size or greater number of photovoltaic supplies, a higher degree of design sophistication is warranted.

2.3 Daily Data Design Method

A computer programme (Ref 3,4) has recently been developed which allows the array and battery size to be simultaneously optimised for a minimum cost and for a specified percentage probability of power availability.

Conceptually, there is a trade-off between array and battery size, i.e. the larger the array the smaller is the battery size required to cover days of low level insolation, or the smaller the array the larger is the need for storage to average over the variable daily insolation. The minimum battery size is that which carries the load from dusk to dawn while the minimum array size is such that the long term mean output just matches the load. These two minimum values are plotted as asymptotic values on nomalised array and battery size coordinates in Fig. 3. Between these asymptotes there is a locus of array and battery sizes which satisfy the specified load for a given percentage of time. Other curves can be computed for other percentage availability values. A brief description of the methodology used to generate these curves is given in Appendix 3.

Given that all coordinate combinations along the constant availability curve will satisfy the demand at that specified availability, the question remains which gives the minimum cost solution ? If one considers the variable costs in this trade-ofdf, the total cost G is given by:-

$$C_T = aA + bB + Co \qquad (2)$$

where a is the unit array cost including array BOS costs $/peak watt)
b is the unit battery cost ($/kWh)
A is the normalised array size
B is the normalised battery size
C_O covers other invariant system costs

Eqn 2 can be transposed to give a linear equation in variables A and B with a slope of - b/a. Plotting this equation on Fig. 3 gives a tangential intercept with the curve of constant availability which can be shown to be a minimum cost array and battery size for the specified availability.

To be meaningful this method requires the use of daily data. Rather than modelling or taking mean data over a number of years, we have used actual daily data for given sites over long periods of time. The longer the time base, the more likely it is that the data is representative of the future. By using real data, any weather patterns of a cyclical nature are automatically accounted for. For example, cyclical "grey outs" associated with the passage of low pressure fronts in winter, will automatically reflect in a larger batter and array sized to cover these periods. The daily data simulation is therefore the only method which allows the prediction of performance with any informationon the percent5age of time for which power is available.

This daily data simulation method has a number of advantages for the designer :-

- it simultaneously optimises the battery and array size.
- the system cost can be minimised for a specified performance criterion
- the cost premium for marginal increase in percentage availability e.g. 95% to 99.9% of the time can be measured.
- the method is sensitive to changing cost relativities between array and battery unit costs, a factor which becomes important as new cell technologies are significantly reducing module costs.

Experience with these simulation models for two systems designed for a temperature climate like that of say Melbourne, for example, using mean monthly and daily performance simulations, showed the design based on daily data was simultaneously less costly and was two orders of magnitude more reliable in providing continuous power.

The disadvantage of the daily simulation model, of course is the need for a large computerised data base with the long computing times needed with the fairly sophisticated software. Since these may not always be available to the designer, there are some general observations we are able to make from the experience gained using the daily data design method. These observations have application to both the annual and mean monthly design methods and are considered under specific headings below.

3. General Observations Arising from Array/Battery Sizing Models

3.1 Choice of Battery Size

Since the storage cost are becoming an increasingly large percentage of the total system cost, it is self evident that the trend in a cost optimised system will be towards a larger array and as small a battery as is consistent with weather patterns. The mean monthly and annual simulations require that the size of battery be nominated and generally imply a fairly large storage. Experience based on the daily simulation model indicates battery capacities of three to five days load provision are adequate for stand alone photovoltaic systems even in cloud-prone temperature climates. This implies that the choice of battery in monthly and annual models should also be

3-5 depending on the frequency and extent of sequential cloudy days with the larger figure being more appropriate for Melbourne and the smaller storage for towns like Alice, for example.

Since the monthly mean simulation shows only the mean state of charge of the battery over the month, it could well drop below the minimum charge level acceptable. It is therefore recommended that when using the mean monthly model that the minimum mean monthly state of change be increased from about 50% for most batteries to a figure of about 70% mean state of change. This has the effect of increasing the array size that arises from the monthly sikmulation. It also has the desirable effect as shown in Fig. 2 of considerably lesssening the period of low charge level and the attendant battery lifetime reduction. A smaller battery also has a lower self discharge power loss.

Battery types chosen for photovoltaic energy storage should be the long cycle life, deep discharge batteries typical of the traction rather than SLI car batteries.

3.2 Array Inclination

The angle of inclination that is chosen depends on whether the designer wishes to maximise the total annual input to the array or to even out the radiation levels as much as possible over the year. In a stand-alone application the latter is the more usual and the optimum inclination angle is usually latitude plus some angle up to a maximum of 23.45^{o}. At the latitude angle plus 23.45^{o} the array faces the mid winter sun increasing the direct radiation in the season of lowest insolation but reducing the diffuse radiation collected. The optimum angle therefore lies somewhere below latitude + 23.45^{o} and is relatively insensitive at these angles when diffuse radiation represents a significant proportion of total winter radiation. The minimum inclination ever in tropical region is recommended as 20° and is related to the self cleaning of the array.

4. Balance of System Design

4.1 Regulation

The solar array is essentially a radiation controlled current source. When storage is used a regulaytor is necessary to limit the voltage to just below the gassing point in order to minimise electrolyte loss and excessive grid corrosion. The choice of regulator comes down to one of two basic types, the linear shunt regulator or the switching regulator. The shunt regulator shunts excess current through a dissipating element in order to keep the battery voltage floating at about 2.35 volt per cell. The simple shunt regulator is commonly used on small photovoltaic power systems. The switching regulator, on the other hand, can be designed to open circuit or short circuit parts of the array incrementally to limit the voltage. Since there are significant disadvantages in running parts of the array into the short circuit, the incremental series switched regulator are recommended for larger supplies. Under the control of the latter type of regulator the voltage drop across the thyristors in the "on" mode must be allowed for in determining the array output voltage.

4.2 Diode Protection

A series blocking diode between the array and the battery is the minimum precaution necessary to prevent the battery discharging through the array at night. As further protection in the event of diode failure a fusible link should be used in series with the diode.

A further note on diode protection relates to the voltage variation sensitivity of the equipment be it an inverter or a D.C. load. Where necessary series voltage dropping diodes which are controlled in number by a voltage sensitive control circuit, may be used between the battery and the load.

4.3 Inverters

Where the load requirement is for A.C. power DC to AC inverter is necessary to convert the output from the array/battery to A.C. at the required voltage. Care must be exercised in the selection of inverter to ensure the efficiency,particularly at partial load, is high. Switched mode inverters are now becoming available which maintain a conversion efficiency of over 90% down to 25% of capacity. The option of switching in parallel inverters with common communicating control as the current demand increases is essentially limited to larger supplies becausse of the high cost of inverters.

When an inverter is used the K factor involved in the array sizing equations must account for the losses averaged over all loads.

5. Summary

Three methods of sizing arrays have been described. The first based on mean annual insolation and load is not generally suitable for stand-alone system design where there is a reliance on the system for continuous power availability. The second method using a simulation of system performance on a monthly mean load and insolation is more suitable for the general design of small stand-alone photovoltaic power systems. Experience with a third method of daily simulation and optimisation, has shown that it is desirable to minimise the battery size (three to five days supply) and increase the array size by increasing the minimum mean monthly battery state of charge to about seventy percent capacity.

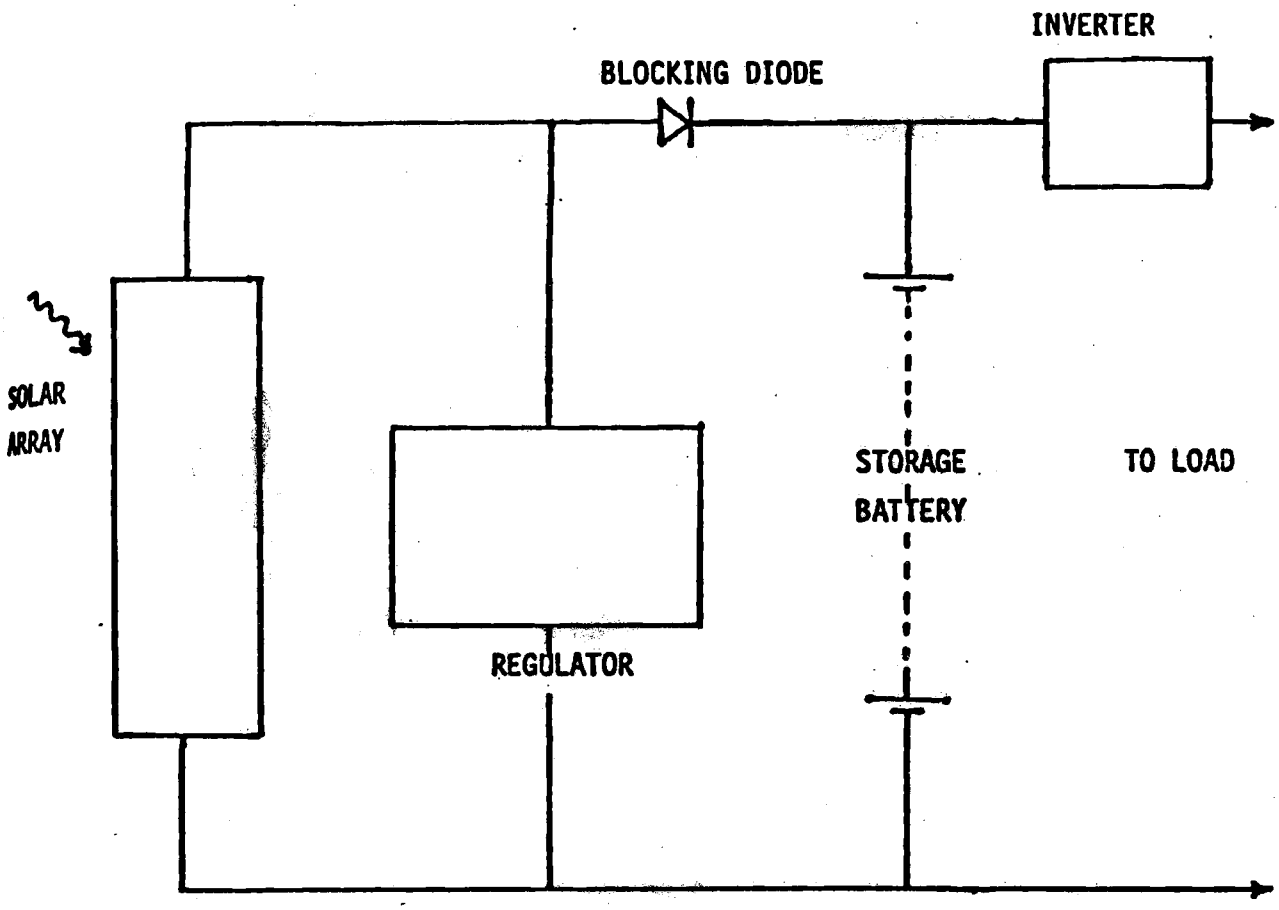

Fig. 1 Simplified Solar Power System

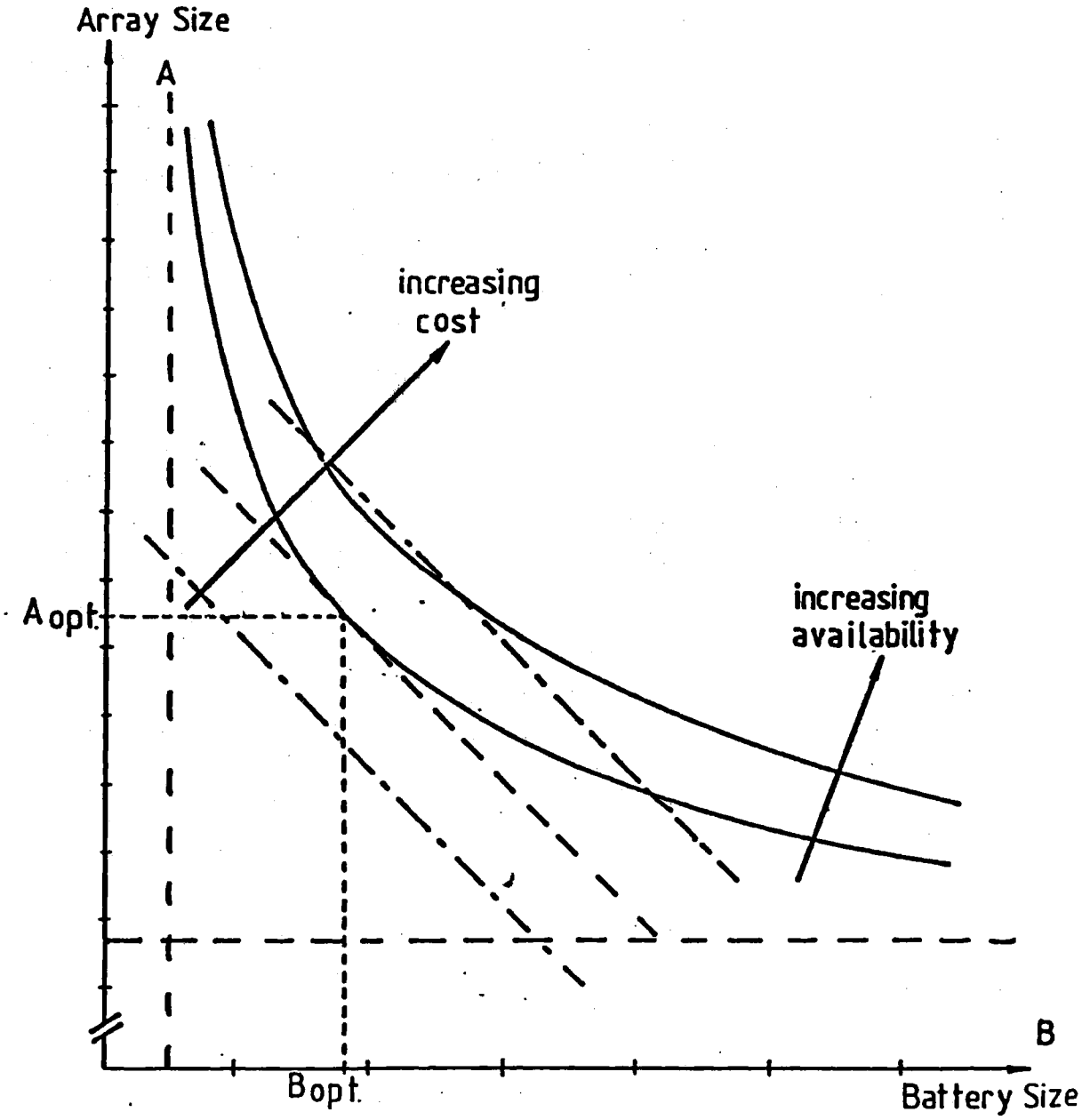

Figure 2 Curves of constant availability ——— &
Curves of constant cost – – – –

APPENDIX 1

In the expression

$$W_o = K\, I_D\, R_D$$

K is a composite coefficient accounting for unit conversion, efficiency and loss factors

$$K = K_1 . K_2 . K_3 \ldots\ldots\ldots\ldots K_n$$

K_1	unit conversion factor, (MJ/m^2-day - KWh/m^2-day)	0.28
K_2	factor accounting for temperature coefficient of output current	1 *
K_3	factor accounting for non-maximum power point tracking	1 *
K_4	factor accounting for series-parallel interconnection mismatch	0.95
K_5	factor accounting for surface dust accumulation	0.35
K_6	shadowing factor	1
K_7	factor accounting for monthly, yearly variation from the mean	0.9
K_8	regulator efficiency, series diode drop	1 *
K_9	line loss	0.95
K_{10}	charge-discharge efficiency of battery	0.9
K_{11}	inverter efficiency	0.9
K_{12}	factor accounting for insolation variation within the year	0.5-1
K_{13}	factor accounting for load variation	1 **

$$K_{monthly} = \prod_{K=1}^{11} K_i \qquad K_{annual} = \prod_{K=1}^{13} K_i$$

* See Appendix 2

** K_{13} is unity for constant load over the year.

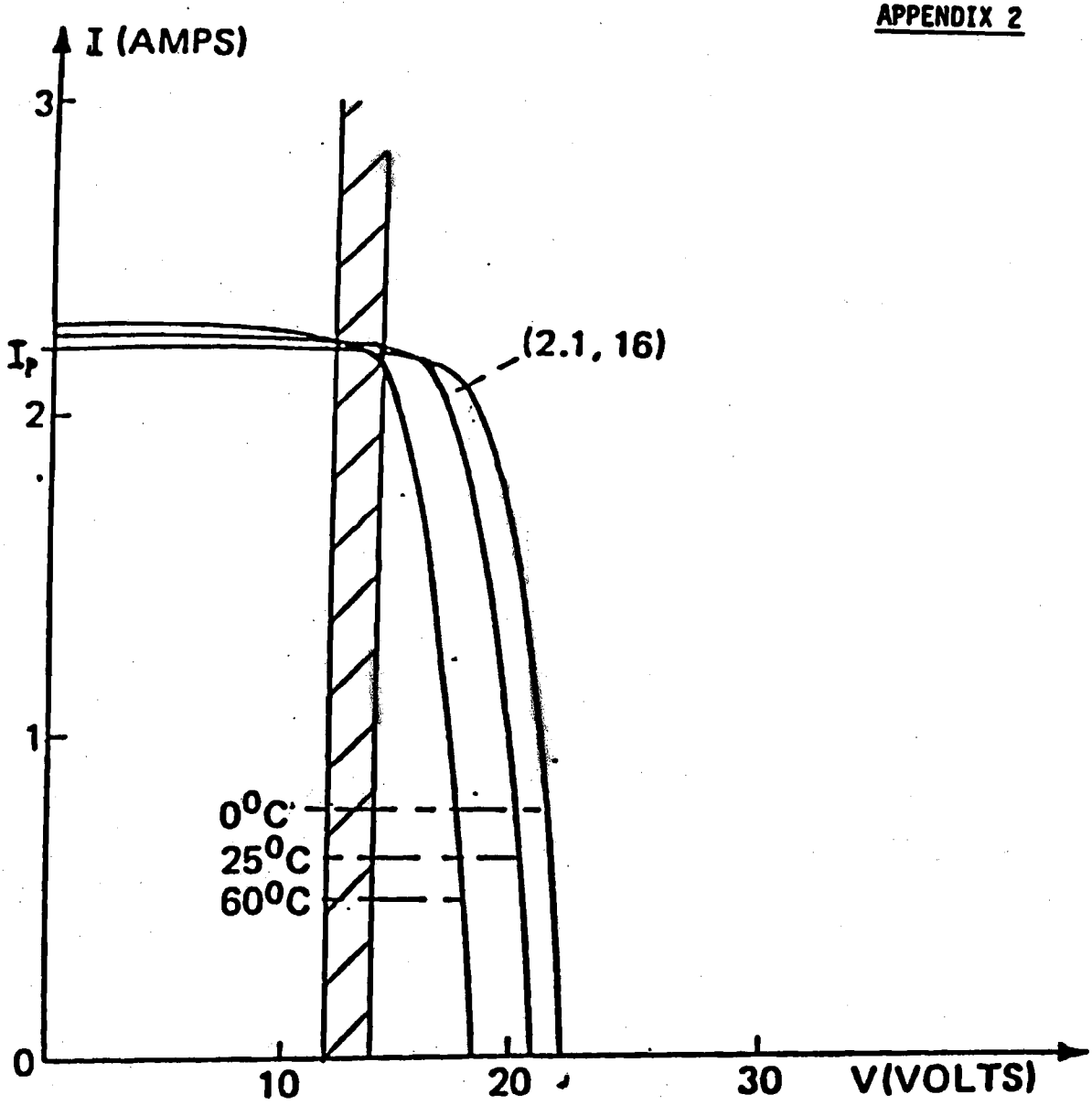

Variation in Solar Module Output with Temperature.

The array voltage required is determined such that the charging voltage of 2.35 volt/cell is met at all temperatures and levels of insolation. The array voltage must be sufficient to allow for the voltage drop across any series diodes or regulators. The module current, I_p, is then essentially temperature independent and losses across the regulator or series blocking diodes need no longer be taken into account.

The ratio I_D/I_p determines the number of parallel strings of modules while the required voltage (including charging overvoltage and diode drops, etc.) determines the number of series modules in each string.

APPENDIX 3

DAILY DATA SIMULATION METHOD

One approach to the design of solar power systems is based on power availability curves, where the system is sized to meet the load power requirements for a specified period of time during the year. These availability curves can be generated in a number of ways. One such way, to be described below, is via an iterative simulation program.

This method of generating power system availability curves requires a computer model of the power system. The model described in Ref. 3,4 simulates the power system on a daily basis and has as an output the number of days on which the system would have been expected to fail over the period analysed. The method of generating availability curves is thus to connect all combinations of array and battery which provide the same percentage availability.

To generate such a curve the computer program initially assumes a configuration of one day of battery storage and, from experience with other systems, array peak current rating limits of, say 3 and 23 times the load current. A midpoint current rating is used as a starting array size. The simulation is then run and the number of days of failure converted to a percentage availability. If this is below the desired level the required array size must lie between the midpoint and the upper limit, while if it is above the desired level the array size will be between the midpoint and the lower limit. The two appropriate array sizes are then adopted as outer limits and the process repeated. The program continues to converge towards the array size necessary to provide the required supply availability until changes in the estimates of power supply failure time are not significant.

The whole process is then repeated for a number of battery storage sizes. The end result is a set of array and battery combinations which are estimated to be capable of supplying power to the load for the desired percentage of time during the year. These can then be connected graphically or analytically to provide the power system sizing tool discussed in the main body of this paper.

POTENTIAL FOR HYBRID ENERGY SYSTEMS IN THE NORTHERN TERRITORY

Dr S Chandra, Mr M Wedd

Department of Mines & Energy, Darwin

POTENTIAL FOR HYBRID ENERGY SYSTEMS IN THE NORTHERN TERRITORY

S CHANDRA AND M WEDD

DEPARTMENT OF MINES AND ENERGY DARWIN NT

ABSTRACT

Diesel generators are currently used for power generation in hundreds of large and small communities throughout the Northern Territory. Alternative power supply systems based on solar and wind energy resources offer competitive methods for power generation in remote areas of the Territory where the cost of diesel power can be up to $2/kWh. Hybrid combinations such as diesel/battery, wind/diesel/battery, solar/diesel/battery are being investigated. Preliminary results on the performance of an 8 kW wind/diesel/battery hybrid energy system being tested in Tennant Creek are discussed in this paper.

1. INTRODUCTION

1.1 Diesel Generation

The Northern Territory (NT) has a relatively small population of about 144 000 spread over 1.35 million square kilometres. The major population centres, Darwin, Katherine, Tennant Creek, Alice Springs and Nhulunbuy account for 70% of the total population and the remaining 30% is scattered throughout the Territory (Map 1). It is proposed to use indigenous natural gas for power generation in the major population centres. (A 1500 km gas pipeline from Alice Springs to Darwin is to be constructed). However a majority of the communities will remain dependent on distillate fuel for power generation.

There are over 40 large Aboriginal communities, each with its own diesel power station and more than 300 Aboriginal outstations. Most outstations either have no power or rely on small diesel generators which are expensive to run. In addition, there are many homesteads and cattle stations which use 10-30 kVA diesel generating sets.

The high cost of diesel power, about 55 c/kWh for large communities to up to 200 c/kWh for small remote communities, coupled with the favourable meteorological conditions offer ideal conditions for using alternative methods of power generation.

1.2 Availability of Wind and Solar Energy

A wind power survey to identify potential sites for wind energy has been conducted. Hourly average wind speed has been measured at fourteen sites distributed throughout the Territory (Map 2). The results of the survey indicate that mean annual wind speeds range from less than 2 ms^{-1} to 5.5 ms^{-1} (Table 1). With the exception of the Barkly region - Central NT - wind speeds are generally low in the Territory. Additional sites are being monitored to determine the extent of the relatively "strong" wind zone in the Barkly region.

Global and direct beam solar radiation are currently monitored at several locations (Map 2). The results show an overall average of 5-6 $kWh/m^2/d$ for the Territory, indicating an enormous potential for harnessing and application of solar energy.

2. HYBRID ENERGY SYSTEM (HES)

The application of renewable energy sources for generating electricity was demonstrated by Dunlite Company of South Australia in 1979-80. Whilst the wind driven generator and photovoltaics of the Dunlite system performed well and produced expected outputs, the project highlighted that further development in inverter technology was needed.

This project stimulated a considerable interest in the NT and it was decided to evaluate a similar system in the Territory for remote area application.

2.1 NT HES

The Schematic diagram of the NT HES is shown in Figure 1. The system was designed and commissioned in May 1983 by Energy Systems International (Canberra) and Hytec Controls (Adelaide). The system features a prototype inverter which converts 240 V output of the battery bank to 240 V AC for normal household electrical appliances.

The main components of the system being investigated in Tennant Creek are shown in Figures 2 and 3.

Wind Generator

Model:	Elektro (Swiss) WV 120 G
Output:	8 kW maximum
Alternator:	3-phase 240 V brushless permanent magnet
Cut-in, rated and furling speeds:	2.5, 12.5, 19.5 ms^{-1} respectively
Propeller:	3 Self-feathering wooden blades, 6 m diameter.

The self-feathering propeller regulates the rotational speed in gusty winds. The wind generator shutdown is by turning tail-vane a full 90° which forces the propeller out of the wind. The wind generator will automatically shutdown if either the wind speed exceeds 100 kph or due to over-current. (Under normal operations the wind generator will automatically shutdown when the batteries are fully charged. However in the present system any excess energy is dissipated in an energy dump). It can also be shutdown and restarted by a remote control switch.

Diesel Generator

Model:	Powerlite ST2 N (12 hp at 1500 rpm)
Alternator:	3-phase, 8 kVA
Fuel Consumption:	2.6 l/h at full-load

The alternator of the generating set has been modified to generate 240 VDC. The diesel control unit has both automatic and manual mode of operation. In the automatic mode the control system starts up the generator when the battery voltage drops below a pre-determined value - 235 V. Under normal operating conditions the control system monitors the battery voltage until it increases to a pre-determined value - 276 V or 2.3 V/cell - when the diesel generator is automatically shutdown. Once the engine has started the control system monitors the engine speed, oil pressure, engine temperature and fuel level and stops the generator if any of these parameters deviate beyond acceptable limits.

Inverter

The prototype inverter uses high speed semi-conductor devices for switching the polarity of the 240 VDC input and produces 240 V modified square wave alternating current. The unit is capable of providing continuous power of 10 kW maximum.

Energy Dump

An energy dump is provided to assist evaluation of the wind generator by allowing it to operate even when the batteries are fully charged. It consists of four 2 kW 3-phase bar radiators. The energy dump control unit monitors the wind generator output voltage and as it rises above a pre-set value of 292 V it connects a "dummy" load of 4, 6 or 8 kW across the output of the wind generator, disconnecting the battery bank from the wind generator.

Load

A normal 3 bedroom all-electric household. Main power consuming devices are oven, stove, washing machine and booster element for hot water system.

Battery Bank

The battery bank consists of 120, 227 Ah two volt Century cells connected in series. At 50% draw-down level the battery bank provides storage capacity for over two days power requirements.

Monitoring

The performance of the HES is monitored continuously by recording the following parameters: Wind speed, wind generator output, diesel generator output, battery voltage, inverter input and output power and power into the energy dump.

These parameters are sampled once every 10 seconds or so by an Atari 400 computer with 32 K memory. The spot samples are averaged every few minutes and the results are stored on disk (Table 2).

3. RESULTS

The HES has proven to be a reliable source of power. There has been no problem with running the normal household electrical appliances on modified square wave AC.

The wind generator was however out of action for several months when after some ten months of trouble-free operation a small portion of a blade broke off due to impact with the support pole in high winds during a thunder storm. A slight damage also occurred to the other two blades. Wrenching of the blades during the impact caused some damage in hub assembly. All three blades and the hub were replaced and the wind generator re-commissioned. It has been operational since that time and proved to be one of the most reliable components of the system.

The observed performance of the wind generator is compared with the expected performance in Figure 4. The two curves agree fairly well in low winds but above 8 ms^{-1} the observed performance is somewhat below that of the claimed performance and the rated wind speed seems to be 14-15 ms^{-1} rather than 12.5 ms^{-1}.

The prototype inverter has performed remarkably well despite a couple of breakdowns. The first breakdown occurred when the wind generator load (batteries) was accidently disconnected before shutting down the wind generator. This caused unusually high voltages to be developed and applied to the input of the inverter which damaged its power switching devices. (This breakdown occurred before an energy dump was included in the system). On another occasion the inverter suffered an extensive damage during a lightning storm.

An advantage of using a 240 V battery bank is that no step-up transformer is required to obtain 240 V AC. This substantially reduces power loses in the inverter. Figure 5 shows that the efficiency of the inverter is 95% for low loads (less than 5%), rising to more than 98% for high loads (greater than 50%).

The efficiency of the battery bank has been estimated by the amount of energy fed into the batteries from the wind and diesel generators (input) and the amount of energy drawn from the batteries (output) over a long period of time. From these figures an efficiency of 65% was obtained. This is considerably lower than 80% efficiency often quoted for lead - acid batteries.

Despite the harsh temperature regime, 5-45°C inside the container, the batteries have been subjected to over the past two and a half years, they appear to be charging pretty well, although a

fair amount of sedimentation has appeared and one of the batteries has had to be replaced. Battery maintenance - topping up the electrolyte level and cleaning terminals - is carried out three times a year, taking approximately 2 hours.

The performance of the data acquisition system has been less than satisfactory. With the existing system it is not feasible to sample any faster than 10 seconds or so, and the computer and the disk drive have been fairly unreliable. It is imperative to employ reliable and more capable systems when monitoring in remote locations.

4. CONCLUSIONS

The technical and operational feasibility of utilising wind generation in conjunction with diesel generation and battery storage has been established. The hybrid energy system has proven to be a reliable source of power. However detailed analysis of the data will be carried out to fully evaluate the technical performance of the system.

Because of the experimental nature of the project the HES incorporated sophisticated automatic controls which more often than not complicated the simple operation of the system. For remote area application however the system should be kept as simple as possible.

A diesel/battery combination is presently being evaluated for application in non-windy areas. This concept has potential to substantially reduce fuel consumption and prolong the life of the diesel engine as it should operate at or near full load for considerably less time.

MAP 1

POPULATION DISTRIBUTION IN THE NORTHERN TERRITORY

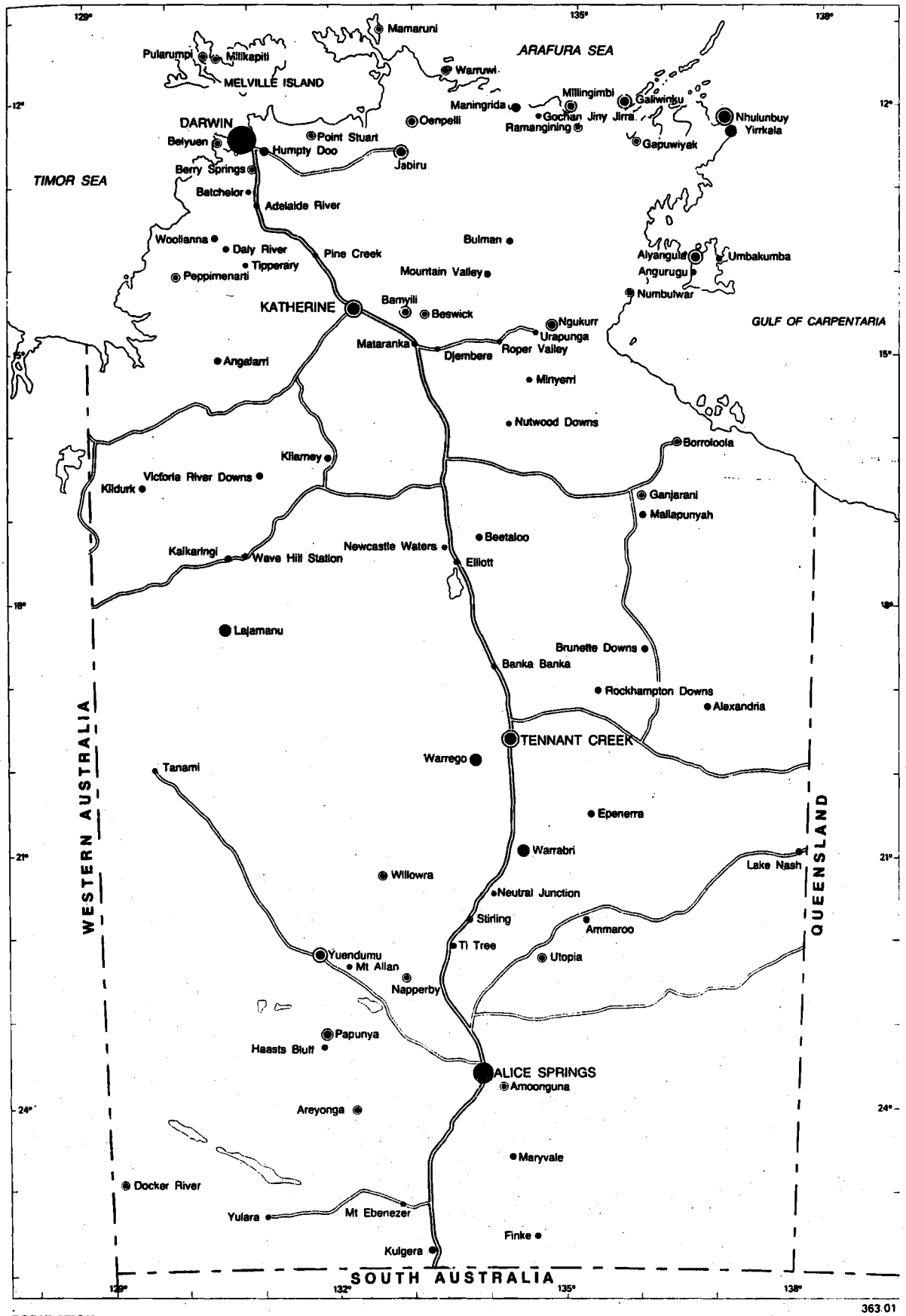

363.01

POPULATION

- 10-175
- 176-350
- 351-500
- 501-750
- 751-1000
- 1001-1400
- 1401-3000
- 3001-5000

DARWIN: 68 400

ALICE SPRINGS: 23 100

MAJOR ROAD

SECONDARY ROAD

SCALE: 1:7 000 000

50 0 50 100 150 200 Km

Drawn by Drafting Branch, Department of Mines and Energy, Darwin.

MAP 2

WIND AND SOLAR MONITORING SITES

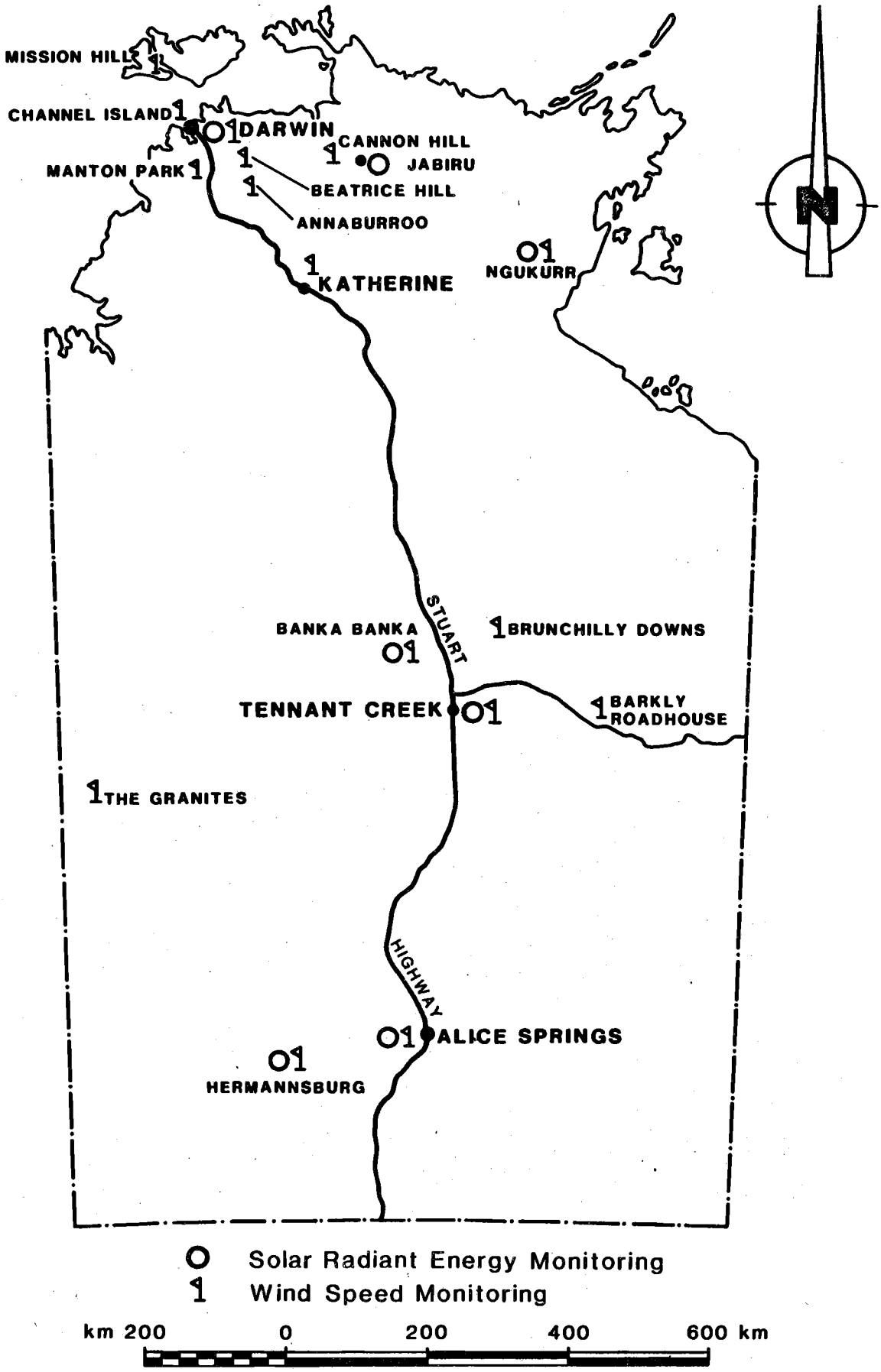

TABLE 1

WIND SPEED DISTRIBUTION

NAME	LOCATION		ACTIVITY	MEAN WIND SPEED (ms^{-1})
MISSION HILL	12°46'	130°34'	Telecom repeater station near Aboriginal community	3.1
CHANNEL ISLAND	12°33'	130°52'	Site for Darwin power station	3.2
CANNON HILL	12°22'	132°56'	Aboriginal community	2.4
MANTON PARK	12°50'	131° 9'	Rural property/horse-stud	1.9
BEATRICE HILL	12°39'	131°19'	Department of Primary Production research station	3.1
ANNABURROO	12°54'	131°40'	Roadhouse hotel/restaurant	2.3
KATHERINE	14°28'	132°16'	Major township	2.3
NGUKURR*	14°44'	134°44'	Aboriginal community	2
BANKA BANKA*	18°48'	134°02'	Cattle station	3.0
BRUNCHILLY DOWNS	18°55'	134°40'	Cattle station	5.1
TENNANT CREEK	19°39'	134°13'	Major township	5.4
BARKLY ROADHOUSE	19°43'	135°50'	Roadhouse	3.8
THE GRANITES*	20°34'	130°21'	Gold mine	5.2
HERMANNSBURG*	23°57'	134°44'	Aboriginal community	3.0

* Based on limited data - monitoring continues

HYBRID ENERGY SYSTEM SCHEMATIC DIAGRAM

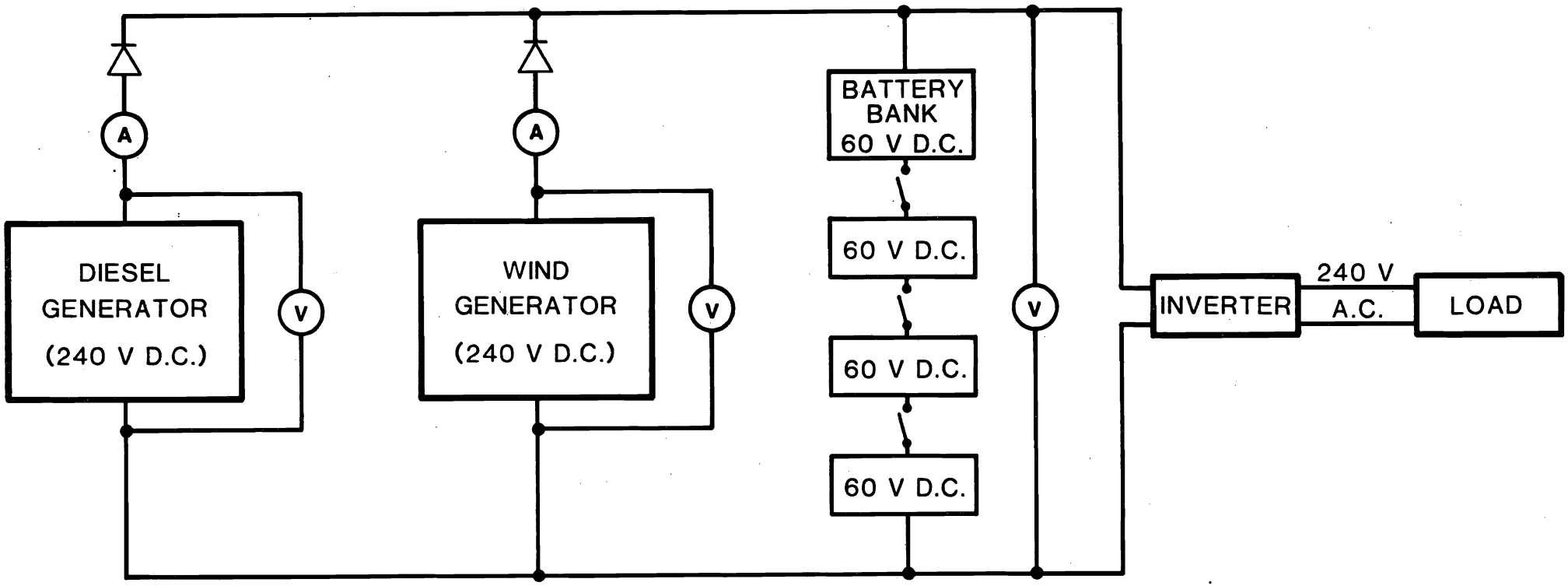

FIGURE 1

FIGURE 2

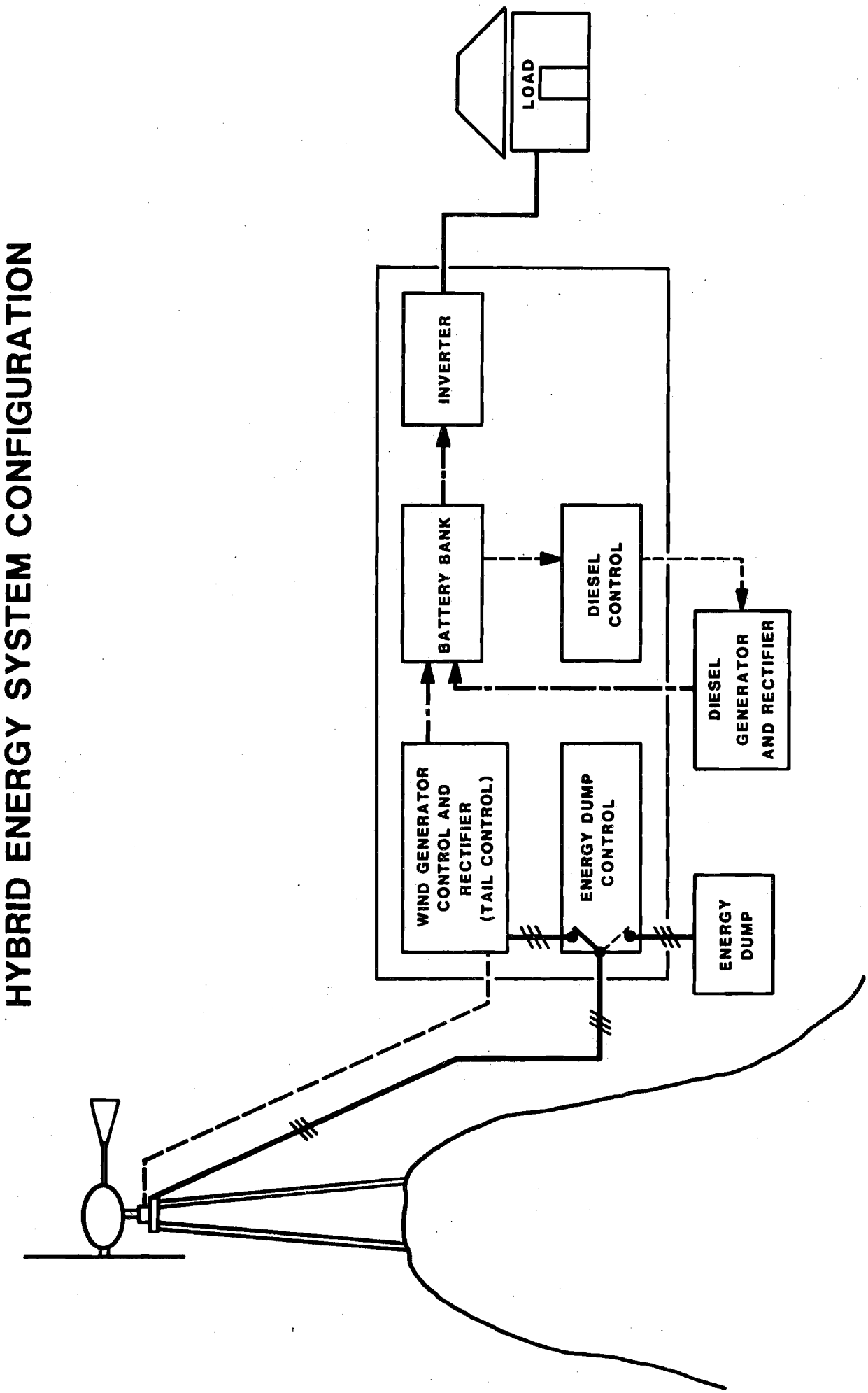
HYBRID ENERGY SYSTEM CONFIGURATION
LOAD
INVERTER
BATTERY BANK
DIESEL CONTROL
DIESEL GENERATOR AND RECTIFIER
WIND GENERATOR CONTROL AND RECTIFIER (TAIL CONTROL)
ENERGY DUMP CONTROL
ENERGY DUMP

FIGURE 3

HYBRID ENERGY SYSTEM

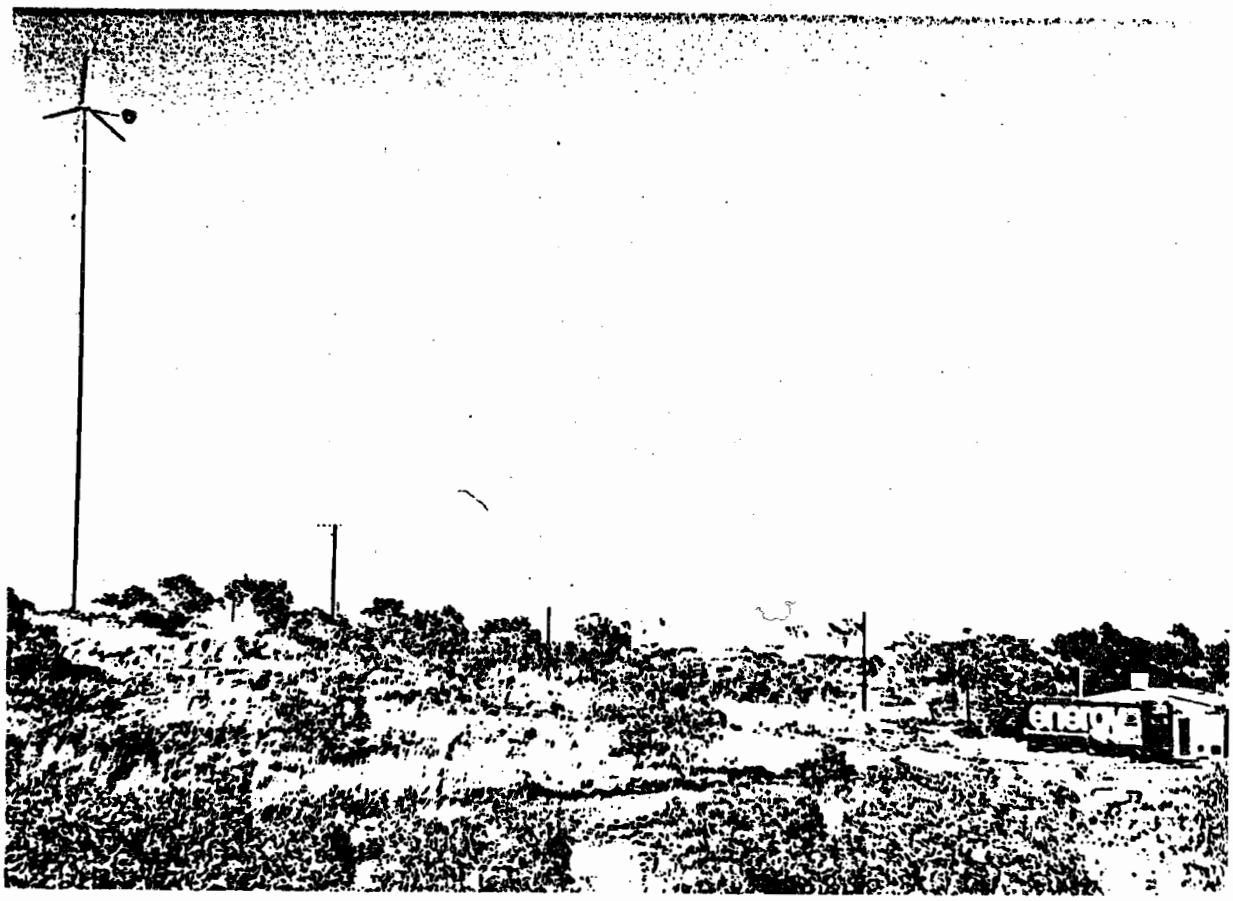

- Wind generator is mounted on a 30 m concrete tower.
- Monitoring equipment is located in a caravan marked "energy".
- Container adjacent to the caravan houses the battery bank, control and power conditioning equipment.
- Behind the container is the 3-bedroom house powered by the system.

TABLE 2

START DATE 20/04/85 TIME 09/01
DUMPING TO DISK EVERY 2 MINUTES.

DUMP NUMBER	BATTERY VOLTAGE	INVERTER POWER IN	INVERTER POWER OUT	DIESEL POWER	WIND POWER	WIND SPEED	WIND DUMP	TIME
027	264	580	576	0	4617	13.8	0	09/55
028	268	605	582	0	4099	12.1	0	09/57
029	268	884	892	0	3335	11.7	0	09/59
030	269	1671	1615	0	4916	13.3	0	10/01
031	274	663	622	0	3916	12.7	0	10/03
032	264	1781	1736	0	2559	10.6	0	10/05
033	258	1622	1598	0	2315	10.5	0	10/07
034	261	2744	2677	0	3567	12.4	0	10/09
035	250	4319	4090	0	3220	11.9	0	10/11
036	258	3575	3485	0	4922	14.2	0	10/13
037	262	3700	3629	0	5210	14.4	0	10/15
038	256	3562	3463	0	3345	12.6	0	10/17
039	248	3359	3296	0	2693	11.3	0	10/19
040	251	3413	3341	0	4157	12.9	0	10/21
041	252	3464	3374	0	3473	12.4	0	10/23
042	260	3659	3531	0	5256	14.2	0	10/25
043	263	3674	3675	0	4940	14.5	0	10/27
044	265	3812	3707	0	5464	15.2	0	10/29
045	264	3748	3682	0	5031	13.8	0	10/31
046	272	2953	2880	0	5669	15.3	0	10/33
047	267	2736	2650	0	3788	12.7	0	10/35
048	265	1119	1082	0	2483	10.6	0	10/37
049	268	537	545	0	1242	12.6	54	10/39
050	254	456	451	0	0	14.3	0	10/41
051	251	460	434	0	0	13.8	0	10/43

Note: Power in W and wind speed in ms^{-1}

FIGURE 4

WIND GENERATOR PERFORMANCE

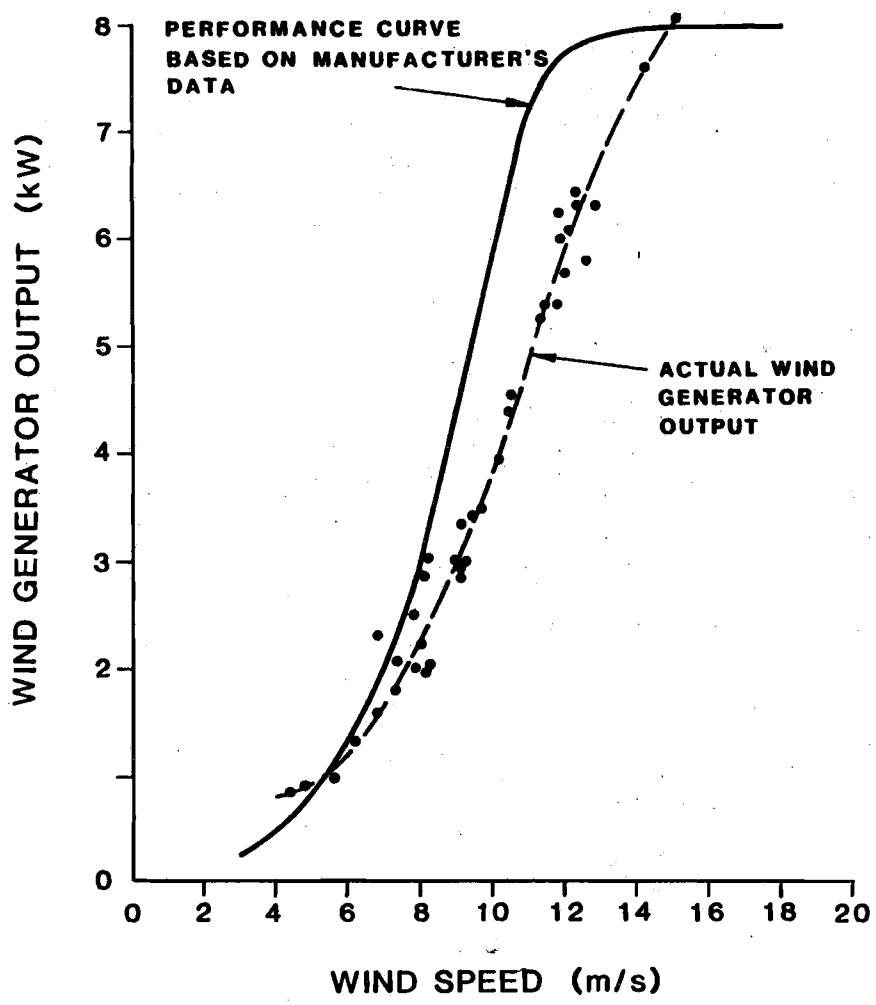

FIGURE 5

INVERTER EFFICIENCY

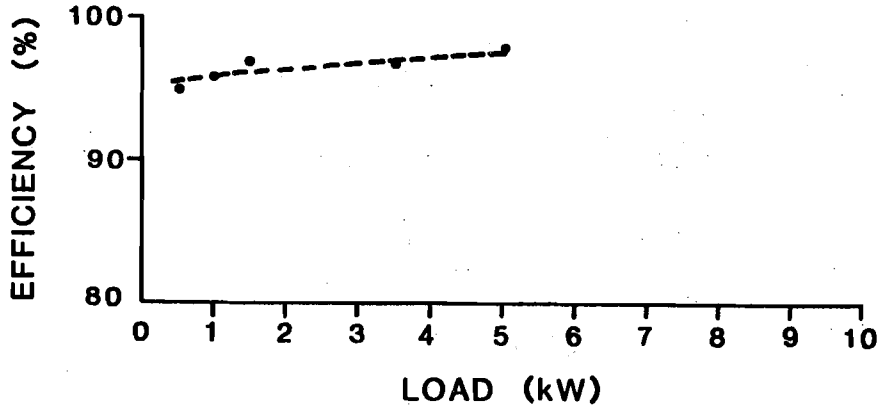

BATTERY SIZING AND PERFORMANCE IN SOLAR POWER SYSTEMS

Mr A O Nilsson

SABNIFE, Sweden

SAB NIFE

SAB NIFE PHOTOVOLTAIC BATTERY SYSTEM SIZING

April 9, 1985

BATTERY SIZING AND PERFORMANCE IN SOLAR POWER SYSTEMS

A year long solar project completed in January of this year by SAB NIFE at the Genoa, Italy Facility has genereated a computer program for sizing batteries for photovoltaic systems, compared performances of NIFE and two other batteries in working PV systems and furnished data for designing an optimum cell for PV use.

This paper details the performance comparison, followed by a brief description of computer program mathematics and some comparisons of nickel cadmium pocket plate with lead acid batteries.

Study of Comparative Battery Performance in a Solar Power System

Measurements of parameters on five pairs of photovoltaic systems, each pair identical, consisting of one system which was test cycled per methodology given below, and one reference system which was measured by not cycled. Three of these pairs tested NIFE batteries; one tested Delco and one Varta battery.

Parameters measured for batteries in cycled systems (N°s 1, 3, 5, 7, and 9) residual available capacity and maximum available capacity.

Parameters measured for both cycled and referenced batteries; solar panel temperature and output current; battery voltage, temperature, load current, water consumption, and insolation condition.

Fixed Values for all Ten Systems

Test location:

44° 24' N latitide, 8° 58' E longitude (Genoa)

System standard load:

400 mA continuously connected blocking diode to prevent discharge of battery through solar panel.

Solar Panel Tilt Angle:

65° S

System Components

System 1 & 2:

Solar panel: ARCO type ASI 16-2000 (2 in parallel)
Battery: NIFE type L404T rated at 185 AH/5 hr. (10 cells in series)

Systems 3 & 4:

Solar panel: ARCO type ASI 16-2000 (2 in parallel)
Battery: NIFE type L404K rated at 177 AH/5 hr (10 cells in series)

Systems 5 & 6:

Solar panel: ARCO type M61 (2 in parallel)
Battery: NIFE type L404T rated at 185 AH/5 hr (9 cells in series)

Systems 7 & 8:

Solar panel: ARCO type ASI 16-2000 (2 in parallel)
Battery: Varta type VB 428 rated at 220 AH/10 hr (6 cells in series)

Systems 9 & 10:

Solar panel: ARCO type ASI 16-2000 (2 in parallel)
Battery: Delco type 2000 rated at 315 AH/100 hr (3 blocks of 6 cells each in parallel)

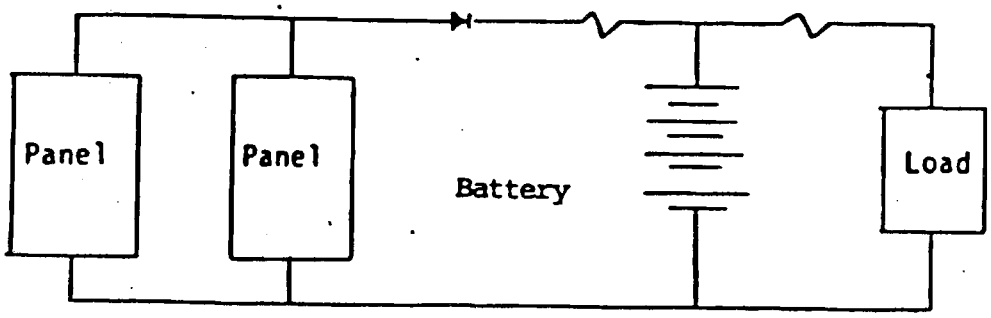

Systems 1-6 NIFE batteries

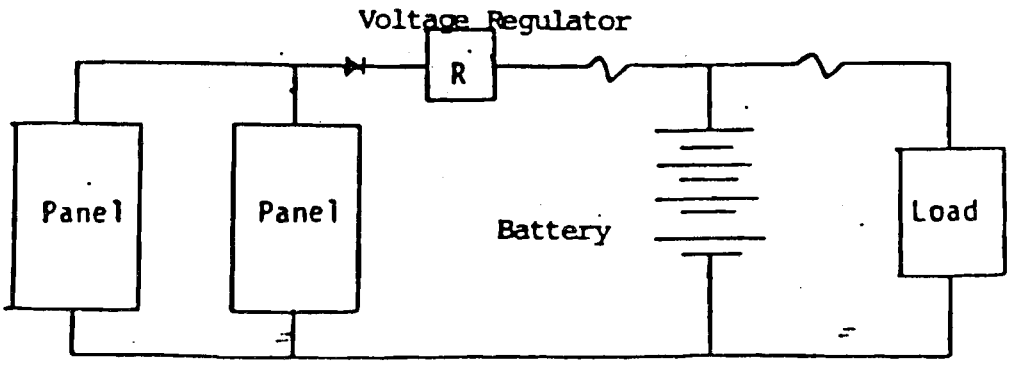

Systems 7-10 Lead-Acid batteries

Fig. 1

Testing Method

Test batteries (in systems 1, 3, 5, 7, and 9) were operated continuously for a month as shown in the circuits above. These charged during periods of sunshine, drawing the excess of current over that drawn by the load; they discharged through the load during non-sunshine periods.

At monthly intervals:

1) The battery was disconnected and after an hour's pause, the residual available capacity was measured by discharging it at the rate of 0.2 x rated capacity amperes down to 1.0 VPC (for NiCd cells) or 0.1 x rated capacity amperes down to 1.85 VPC (for lead acid cells).

2) The battery was then charged at the rate of 0.2 x rated capacity amps for 7 hours (NiCd) or 0.1 x rated capacity for 12 hours (Pb acid).

3) The battery was discharged again as in (1) to check for aging by measuring the maximum available capacity.

4) The battery was then recharged as in (2) to the residual capacity measured by (1) plus or minus the amount of AH it would have received or discharged during its normal operation over the time period of the testing procedure. This gives it the same charge as if it had not been tested (cycled). It is then reconnected to the systems for another month of operation.

Battery Capacities

Brand	Type	Rated Cap. AH	Min. Resid. Cap for Test	Max All. Disch %	Avail. Cap. AH	Absolute Min. Cap.
NIFE	L404T	185	60	100	125	0
NIFE	L404K	177	60	100	117	0
Varta	VB 428	220	104	80	116	44
Delco	2000	315	180	50	135	120

Battery sizes chosen to provide about the same available capacity.

The minimum residual capacity for test allows for five days of zero sunlight per month when batteries will not be charged, to avoid residual capacity sinking to or below absolute minimum capacity.

Notes on Testing

A total of 12 monthly test cycles was planned and testing began on November 29, 1983. The standard load for all systems was 500 mA, but after a month this proved to be too high a drain on the panels. Accordingly, cycles 2-12 were conducted with a 400 mA load. Cycle two began February 7, 1984 with batteries charged as follows:

NIFE: 48 AH
Varta: 92 AH
Delco: 168 AH

Thereafter, cycles began with battery charges corresponding to (4) above.

Performance of Individual Systems

Systems 1 & 2 NIFE:

All batteries were fully charged at the end of April, 1984 and most of July and August. Number 1 operated satisfactorily till January 11, 1985, when very low voltage indicated total discharge due to low insolation.

Number 2 had residual capacity of 15 Ah at the end of the test, January 15, 1985.

Systems 3 & 4 NIFE:

All batteries operated satisfactorily over the entire test period. They were fully charged during the latter half of April and parts of June, July, August, September and October.

Number 3 had a residual capacity of 46 AH at end of test on February 15, 1985.

Number 4 had a capacity of 22 AH on February 15, 1985.

Systems 5 & 6 NIFE:

Number 5 operated till January 16, 1985, when it was found totally discharged due to low insolation.

Number 6 operated till February 12, 1985, when it was found totally discharged due to low insolation.

Systems 7 & 8 VARTA:

The voltage regulators seem to have malfunctioned at times, indicated by erratic measurements during the middle of April on number 7, and a maximum charge of only 140 AH on number 8, June-September.

Number 7 was fully charged June-September and was totally discharged by January 24, 1985.

Number 8 was totally discharged as of January 17, 1985 due to low insolation.

Systems 9 & 10:

All batteries lost more than 75% of capacity. Number 9 voltage regulator seems to have malfunctioned as indicated by capacity losses and rising charging voltages. In addition, after four months one block lost some electrolyte. Only two of the three blocks were tested in June and the system was disconnected for July. In August, the defective block was replaced and the system restarted. However, the distribution of residual capacity tested uneven amongst the three blocks:

28-47-25% in September
33-33-33% in October
22-27-50% in November.

The system was then permanently disconnected.

Aging

Capacity loss occurred in all cycled batteries to the end of the last (12th) cycle, probably due to their repeated discharging to minimum capacity during the monthly test cycles. The loss was 13% for number 1, 13% for number 3, 5% for number 5, 10% for number 7, and about 100% for number 9. Capacity loss at the end of the 12th cycle for the non-cycles batteries:

Number 2: 2%
Number 4: 1%
Number 6: 0%
Number 8: 1%

Number 10 was not measurable because one of the three cell blocks was electrically destroyed. See enclosure 1, 2, 3, and 4.

Water Consumption

As measured for the system number 2 battery, water loss was 100 grams over the 14 month test. At this rate, topping-off would be required in 6-7 years for a NIFE battery.

Future Testing

Systems number 2, 4, 6, and 8 will continue to be operated and checked for endurance/aging over the next year at least, following current procedure. (They were tested for residual capacity by the cycling procedures described at the end of the 14 month test). However, the voltage regulator on number 8 (Varta) will be replaced by a zener diode operated at 14.5-15V.

Conclusions

The test cycled NIFE L404K battery achieved close to full capacity in June; both it and the Varta battery reached full capacity in August. The two cycled NIFE L404T batteries reached 90% of their capacities. The Delco battery failed to withstand the rigorous test cycling conditions, and lost 100% of its capacity. Overall, the L404K performance was clearly the best.

This battery comparison project has demonstrated two clear advantages of pocket plate nickel cadmium over lead acid batteries for photovoltaic applications; no need for a protective voltage regulator, and the availability of the battery's entire capacity at any degree of charge, rather than the retention of a minimum capacity as for lead acid types. Other advantages are noted in the following pages based on decades of experience.

The data from this study re-inforced the feasibility of sizable solar power systems using pocket plate nickel cadmium batteries which need minimal attention over estimated service lives of 20 years.

Development of Computer Program for Sizing Solar Power Batteries

Study, define and finalize mathematical models of solar radiation at ground level, photovoltaic panel, battery and load.

Solar Radiation at Ground Level

Consists of direct radiation as diffused through the atmosphere:

$$R_d = (D)\, I_o \left(\frac{\bar{r}^2}{r}\right) \sin E_1$$

where:
- R_d = watts/m^2
- D = diffusion factor
- I_o = Solar constant - 1370 w/m^2
- $\bar{r}$ = av. distance, sun-earth
- r = present distance, sun-earth
- E_1 = radiation falling on a horiz. plane

Reflected radiation $R_r = R_d$ x reflectivity ratio of reflecting surface.

Photovoltaic Panel Output

$$V_{corr} = V_r\, V_c n_s (t_c - t_r) - (\Delta I/np)\, n_s R_s - (\Delta I/_{np})\, ns\, K_v (t_c - t_r)$$

where $I = Isc_r (R - 1) + n_p I_c (t_c - t_r)$

t_c = panel temperature

t_r = reference temperature

n_s, n_p = number of solar cells in series and parallel

Isc_r, I_c

V_c, R_s are specific panel parameters

K_v, K_I

I is taken from specific panel I - V curve

$$I_{corr} = I + V_{corr}\, n_p K_I (t_c - t_r)$$

Battery

Parameters are
- C_o = battery capacity
- C = actual residual capacity
- $V_B(c)$ = charging voltage at C (a function of charging current, state of charge and temperature)
- $R_B(C)$ = internal resistance at C (a function of state of charge and temperature)
- $n(c,t)$ = charging efficiency (a function of charging current, state of charge at the moment and temperature)

These mathematical models are incorporated into the HP21MX computer program, which can size a photovoltaic system for a given location on earth, solar panel type, battery type and load. See computer flow chart (enclosure 5).

BATTERIES FOR PHOTOVOLTAIC SYSTEMS

Pocket Plate Nickel Cadmium Batteries Compared with Lead Acid Types

100% of the nickel cadmium battery capacity is usable at low or high states of charge with nearly constant output voltage, regardless of temperatures between -29° and 55°C. Lead acid batteries must be oversized, to allow a 20-50% maximum reserve capacity. Further, their output voltage varies with degree of charge and extremes of temperature.

The nickel cadmium battery's alkaline electrolyte only transfers ions between the plates; it does not react with its active materials or steel and propylene mechanical parts. Thus, there is no corrosion to degrade performance and aging is negligible. Service life expectance is over 20 years. Lead acid batteries corrode their lead parts and precipitate out their active materials with time, leading to deterioration of performance.

The lack of corrosion in the nickel cadmium pocket plate battery insures constant strength in its steel construction; there is no unpredictable "sudden death" from structural failure due to corrosion or shock, or to bridging between plates as in lead acid types.

The nickel cadmium battery can be operated down to -50°C; the lead acid battery limit is -10°C in discharged condition. If frozen, the nickel cadmium battery cannot be damaged, as can the lead acid type. The nickel cadmium battery can operate long periods at up to 55°C close to rated capacity. At 33°C a lead acid type approximately doubles its water consumption, hydrogen generation and grid deterioration, while at 42°C its life expectancy is reduced to about one fourth.

The pocket plate nickel cadmium battery does not need a voltage regulator or cut-off control, due to its even fail-proof operation and its ability to withstand complete discharge. The lead acid type generally requires these protectors against external/internal surges or complete discharge which would cause sulphation.

A smaller solar panel area is required with pocket plate nickel cadmium batteries than with lead acid as an overall result of the former's total discharge capability, high charging efficiency, low aging, and low self-discharge characteristics.

Further details may be found in the NIFE Solar Power Bulletin, as well as "NIFE Nickel Cadmium Batteries" and "NIFE Block Battery Technical Data".

SAB NIFE

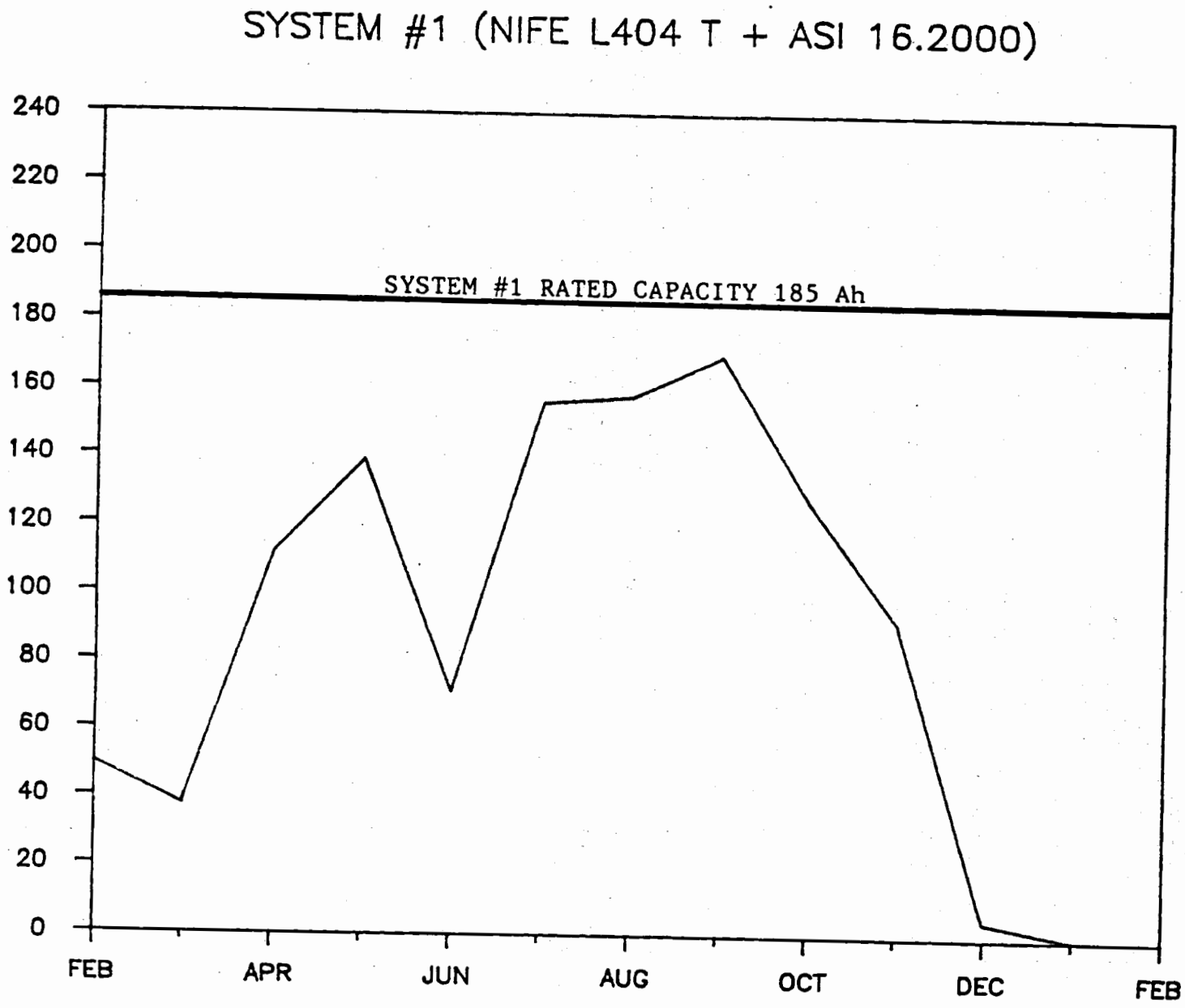

ENCL 1

SAB NIFE

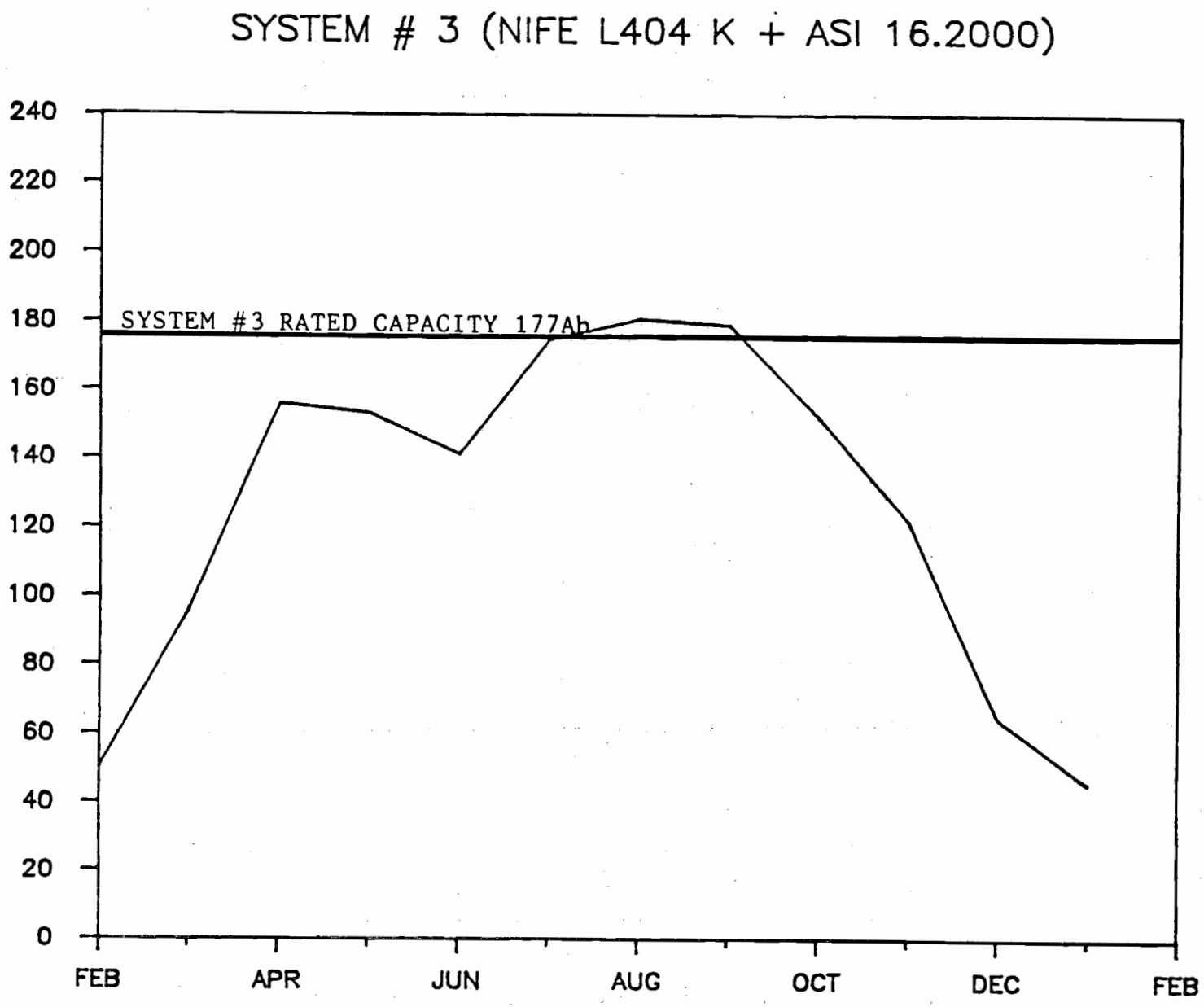

ENCL 2

SAB NIFE

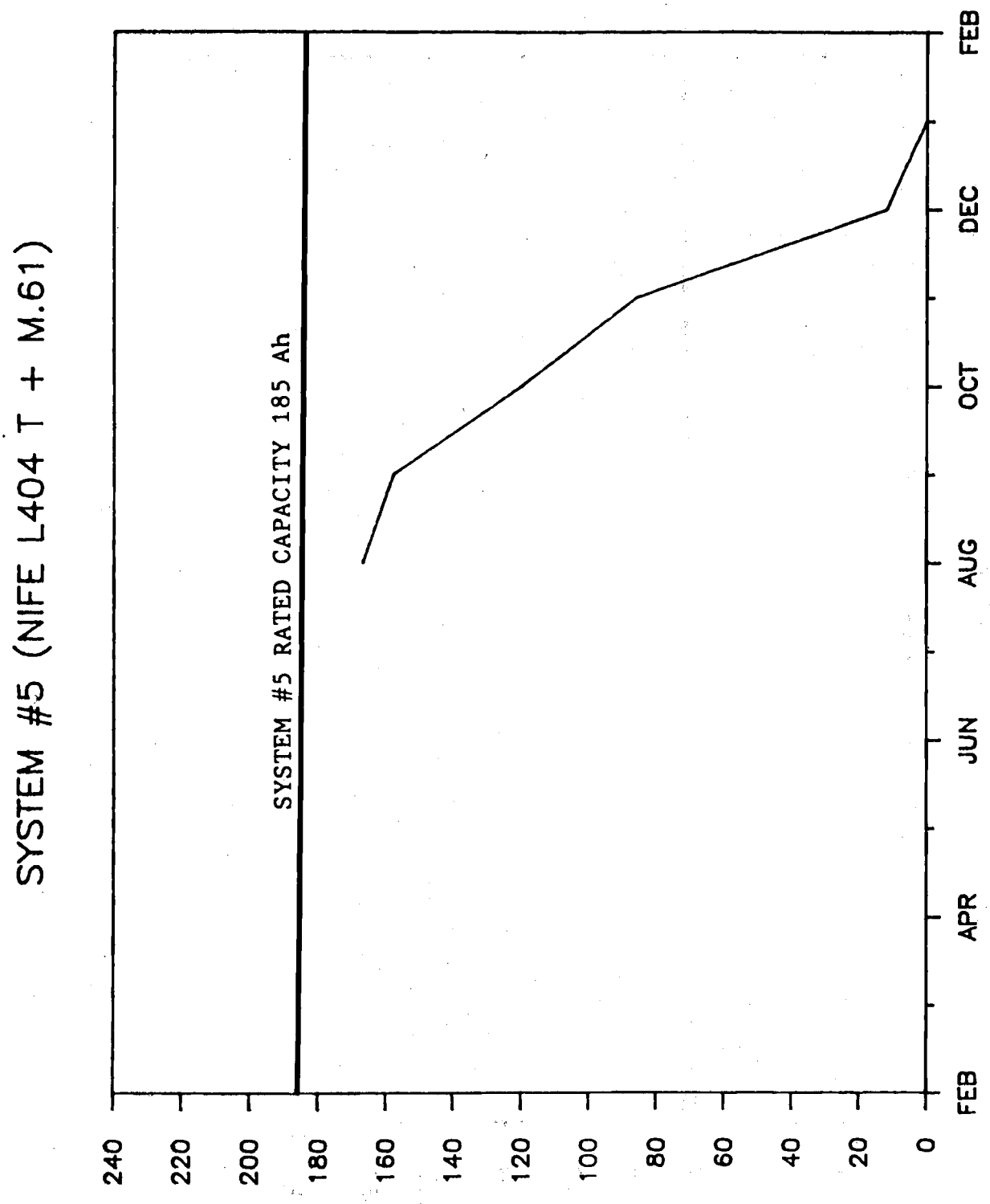

ENCL 3

SAB NIFE

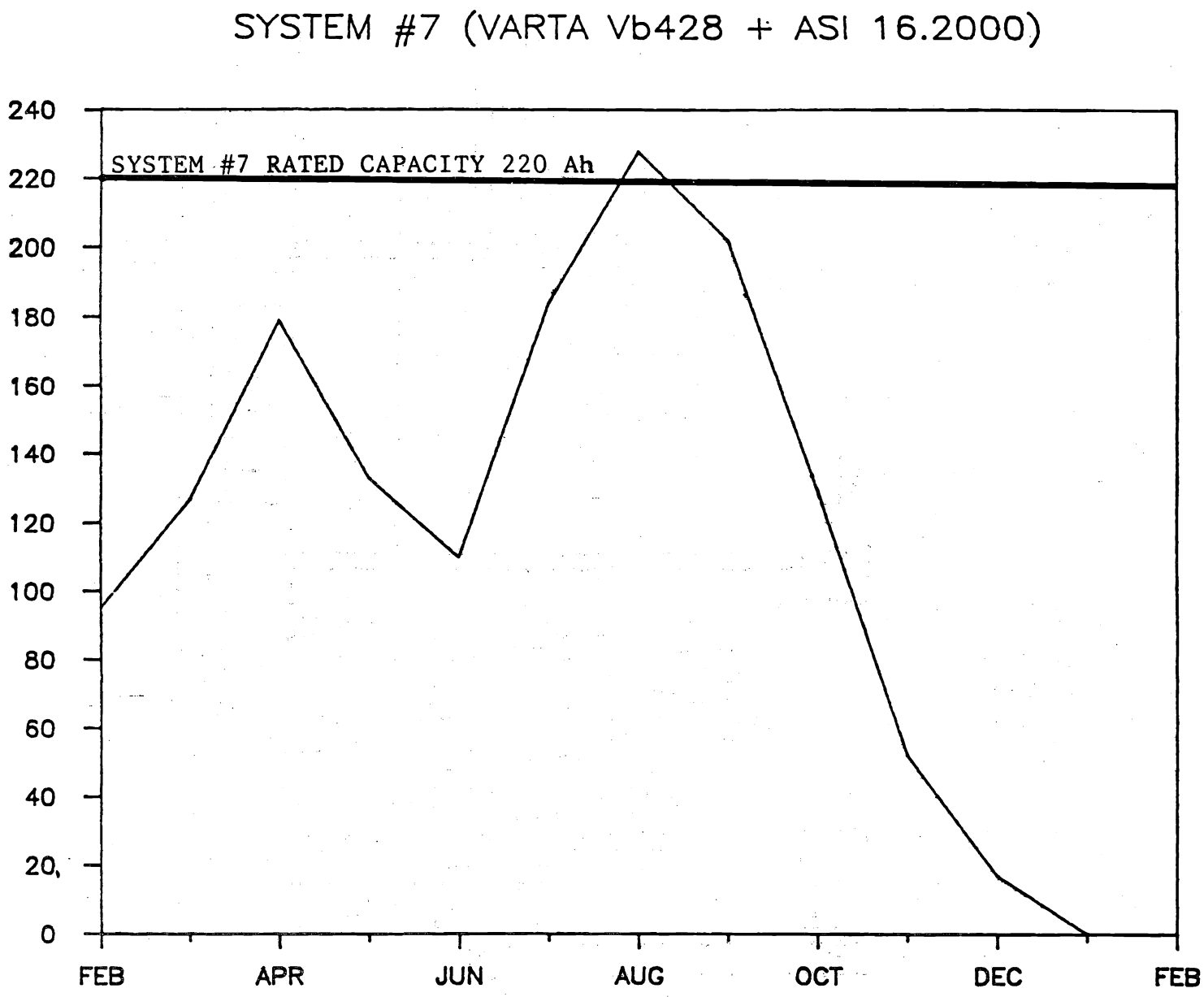

ENCL 4

SAB NIFE

DATA ACQUISITION SYSTEM

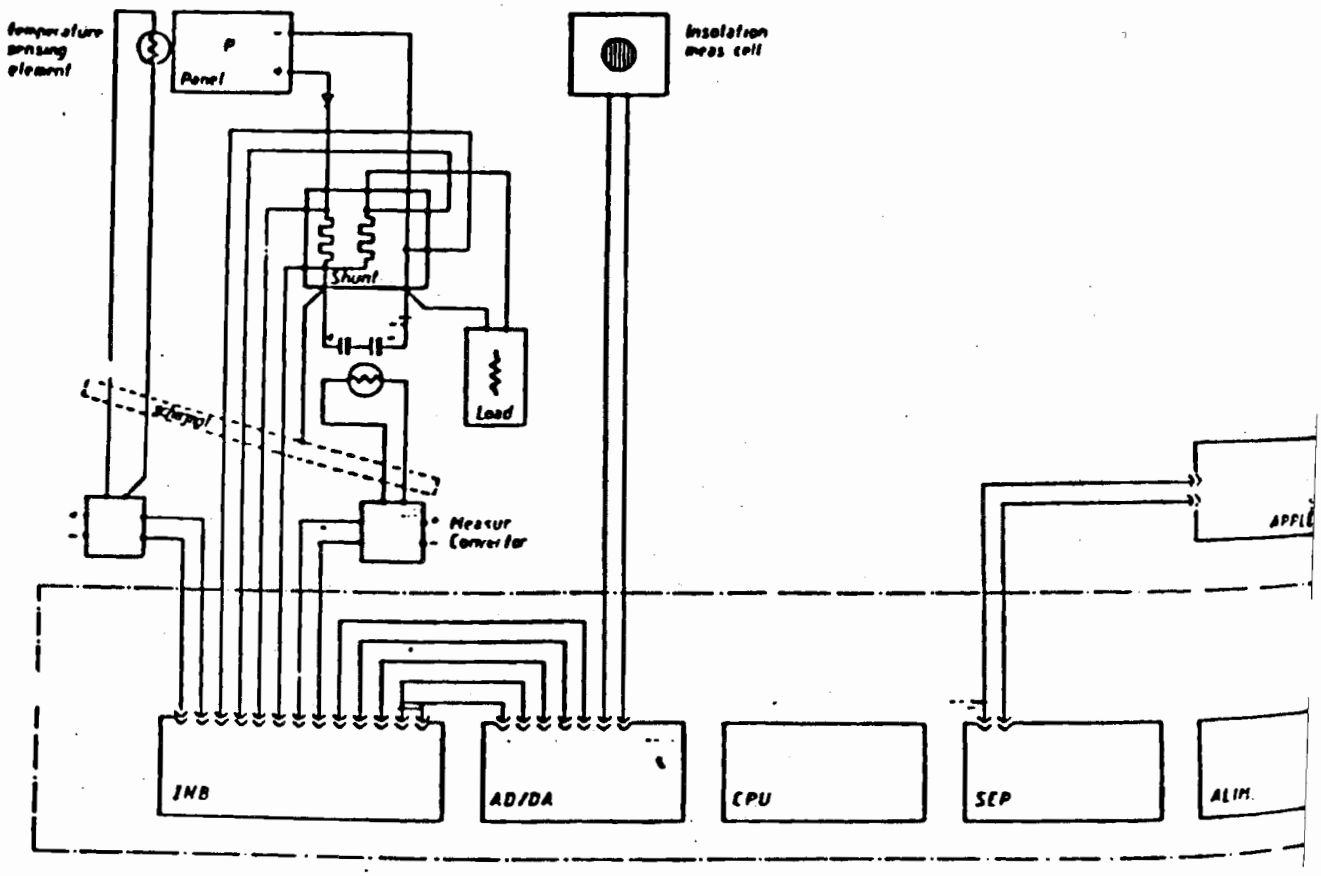

ENCL 5

STORAGE BATTERIES - SELECTION AND MAINTENANCE

Dr J Der

Telecom Research Laboratories, Melbourne

BATTERIES - SELECTION AND MAINTENANCE

J. DER B.Sc., A.R.A.C.I.

TELECOM AUSTRALIA RESEARCH LABORATORIES

ABSTRACT

Some practical and economic considerations are given regarding the various energy generation systems for remote area power supplies. Where a system includes electrochemical energy storage, the only commercially available alternatives at present are the nickel-cadmium and the lead-acid batteries. It is claimed that the lead-acid energy storage system is more cost effective, if the right type is selected for the application. The importance of maintenance is emphasised and maintenance procedures are discussed.

INTRODUCTION

Electrical power is an integral part of modern-day living. This is true in built up, highly populated, urban areas as well as in remote, physically or geographically isolated areas. There are a number of options available for the planners and designers of remote area power supplies. Consideration has to be given at the very early stages of design to parameters such as what the power supply will be used for (telecommunication, agricultural machinery, home service equipment etc.), what will the power requirement be for the service (size of supply) and what will be the maximum power demanded by the system at any given time.

As the investment in remote area power supply is usually a long term investment, the likely development in any particular area must be assessed carefully. However decision often has to be based on what is possible or on what is viable, rather than what the cost per unit energy is at any given time. Regardless of this, if alternatives are available the overall cost has to be considered very carefully because there are considerable differences in the unit price of energy depending on the mode of generation and on the likely period the system is required or expected to provide satisfactory service.

Fig. 1 shows the comparison in the price of energy versus consumption rate for a number of power generating systems. It can be seen that if grid connection is available for no connection cost, then grid supply is the cheapest energy regardless of the consumption rate. Where direct grid connection is not available but can be obtained at a cost, the energy price depends very much on the consumed quantity and it can be very expensive if the power demand is only moderate. Other systems such as diesel, diesel/battery, wind/battery and photovoltaic/battery are also shown in terms of their price. In the construction of these curves, the useful service life for grid connection was assumed to be about 30 years, for photovoltaic cells 20 years, for wind generators 15 years and for batteries the expected life was considered to be about 5 years. Some diesel running and maintenance costs are also included. Two interesting features can be observed: the first is that a diesel/battery hybrid is shown to be cheaper than the diesel alone. The second is that the price of diesel energy starts to increase appreciably if consumption is low and that at low energy demand the wind/battery and even the "high technology" photovoltaic/battery hybrid are economically competitive with diesel.

At Telecom experience has shown that for our applications the "break even" point between diesel generated and photovoltaic/battery generated power today is about 300 watt continuous consumption. Below this power requirement the photovoltaic system is cheaper than diesel.

Photovoltaic cells will not generate power without solar radiation, wind is much less predictable even if the position of the generator is selected correctly. Consequently batteries are required for these systems. Today, large battery installations are

seriously considered to be economical for "peak shaving" where mass generated power is fed into the common grid. Power storage facilities are a vital component of these options and the proper selection would make a considerable contribution towards the reduction of the overall cost of energy.

Possible Electro-chemical Energy Storage Systems

Primary cells are electro-chemical systems, they contain stored electrical energy which can be utilised, but they cannot be used to "re-store" energy generated by other primary sources. The cost of using a primary energy source for remote area power would be prohibitively expensive, and for practical applications only rechargeable systems are suitable.

Possible secondary electro-chemical energy storage systems are:

Lead-acid
Nickel-cadmium
Nickel-iron
Nickel-zinc
Zinc-air
Zinc-bromine
Zinc-chlorine
Sodium-sulphur
Lithium-aluminium-iron sulphide
Redox systems
Fuel cells

Fuel cells are not really rechargeable and strictly speaking they are closer to primary energy sources than secondary. They do not require another energy generating system for their operation but they consume fuel when used. All the other systems (with the exception of the zinc-air battery) are electrically rechargable.

The main thrust of this seminar is to consider existing technology and although the energy storage systems listed above are possible alternatives, only the first three in the group are available commercially. The rest are the so-termed "advanced battery systems". A considerable amount of research work has been expanded on their development. The research work in some of the systems is more advanced than in others and it is possible that they may become commercial realities in the not too distant future (e.g. nickel-zinc, zinc-bromine). However for present remote area power supplies the two most important storage systems are the lead-acid and the nickel-cadmium batteries.

Which Battery System to Select

In the following paragraphs problems associated with low and medium size units will be considered. As shown above the selection for large units is somewhat easier and the market is well supplied to satisfy demand. Very small units designed for intermittent, non-essential, temporary applications are also available. These units either do not use batteries at all or only on rare occasions. Batteries are a must to satisfy regular power demands if the primary power source is photovoltaic cells or a wind generator. Under certain conditions batteries can be justified for diesel generators as well.

Table 1 shows the approximate power needs if service has to be made available for about 5 to 10 hours daily, together with the maximum current which has to be supplied and minimum capacity which will be used in that period. The number of cells needed to achieve the required potential while using minimum capacity is also shown for nickel-cadmium and lead-acid batteries. These figures are simple arithmetic however the current shown will have considerable influence on the actual capacity required, as the rate of discharge determines the capacity the battery can provide.

Table 1

Power consumption of load kW	Time per day hours	Daily energy kWh	Potential Volt	Current Amp.	Capacity Ah	Number of Cells required Ni-Cd	Number of Cells required Pb-acid
0.3	13	3.9	50	6	78	42	24
0.5	10	5	240	2.1	21	200	120
1.0	10	10	240	4.2	42	200	120
1.0	5	5	240	4.2	21	200	120
2.0	5	10	240	8.3	42	200	120
5.0	5	25	240	20.8	104	200	120
10.0	5	50	240	41.7	208	200	120

When deciding on the power storage system itself, very careful consideration has to be given regarding the advantages and disadvantages of nickel-cadmium and lead-acid battery characteristics. Both systems, if maintained correctly, are accepted as very reliable. However as can be seen in Table 1, more nickel-cadmium cells are required than lead-acid cells, to achieve similar battery potentials. The charging efficiency of the lead-acid

battery is also better than that of the nickel-cadmium cells. It is easy to keep them fully charged and by reading cell potentials and acid densities, their general conditions can be assessed easily. (This particular advantage is disappearing with the introduction of sealed lead-acid batteries). (The nickel-cadmium battery has some advantages over the lead-acid system and this can be important in some applications. It can be fully discharged and left open circuit in this condition for extended periods. As the radicals of the electrolyte are not bonded in the charge-discharge reaction, the plates can be placed very closely together resulting in an improved high rate performance. The battery would also work satisfactorily at very low temperatures. However, it is more expensive.

The overall effect of these differences is that, apart from some special applications, the lead-acid batteries are usually preferred and can provide satisfactory service in most cases. For this reason only lead-acid batteries will be discussed in the remaining part of this paper.

Selection of Lead-Acid Battery Type

Lead-acid batteries, depending on their application, can be divided into the following four types:

1. S.L.I. (Starting, Lighting, Ignition)
2. Stationary float service
3. Traction (Motive Power)
4. Sealed (Starved electrolyte, Recombination etc.)

1. S.L.I. batteries were designed for the short, very high current discharges needed to crank engines followed by an immediate recharge by the generator or alternator at a relatively slow rate. The capacity which is discharged is only a few percent of its total capacity, consequently, it can be said that its duty cycle is very shallow with an occasional deeper discharge when parking lights are operated without the engine running.

The conventional S.L.I. batteries are usually constructed using thin plates and lead-antimony grids in both negative and positive plates. The batteries are made for mobile use, they are compact and vibration resistant. The acid density, when charged, is above 1250 kg/m^3. They can withstand a certain amount of overcharge but have to be topped up with water (preferably distilled or deionized) so that the plates are always immersed in the electrolyte. These batteries can only be exposed to a limited number of deep discharge cycles. They are the cheapest available units, but they would be the most unsuitable type for remote area power supplies.

2. For stationary float operation, the available lead-acid cells are the plante construction, the pure lead pasted positive, the lead-calcium pasted positive and the circular plate pure lead negative/positive pasted ("Bellcell"). In the first three types mentioned above, the negative plates are all lead-antimony alloy grid pasted. These batteries are designed for very long life (15 years minimum) and can be kept fully charged by a float potential of about

2.2 volts. They are not suitable for regular deep discharge duty cycles but at a moderate discharge rate their shallow cycling performance is very satisfactory.

In Australia the pure lead pasted positive, lead-antimony pasted negative is the standard long life stationary cell for float operation such as in Telecom exchanges. This was also the type selected to provide the power reserve for Telecom's remote area power supplies using photovoltaic cells as the primary power source. Many micro-wave repeater stations on outback trunk routes are powered by a photovoltaic/battery system . The approximate duty cycle to which these batteries are exposed in this application is shown on the first line in Table 1. The total battery capacity is designed to provide about 10-12 days power reserve and the battery state of charge is not allowed to go below 50% capacity (at the 10 hour rate) during the winter months. The daily cycle at less than the 100 hour discharge rate consumes about 7% of the total capacity. (A 500 Ah cell at the 10 hour rate is expected to provide approximately 1000 Ah capacity if discharged at the 100 hour rate.) When tested in the laboratory under a simulated solar cycle regime, it was found that these batteries can be expected to provide reliable and satisfactory service for about 10 years. The excess battery capacity which has to be provided is considerable and can only be justified on major routes where service reliability is of prime importance.

The size of the photovoltaic solar array has to be large enough to provide the re-charging capacity over and above the load demanded by the system for its continuous operation. For a microwave repeater there are typically four arrays in parallel, each providing a share of the charging current. During the day if the battery potential reaches 2.35 volts per cell, the first array is disconnected from the batteries by a control circuit using power MOS FETS. The second and third arrays are also switched out of the charging circuit as the battery potential again reaches 2.35 volts per cell so that finally only one array provides a trickle charge plus the load current. When the solar radiation intensity is reduced and the battery potential drops below 2.25 volts per cell the arrays are switched back on one at a time to provide float current for the longest possible time. Using this technique the depth of discharge is further reduced with a consequent extension in service life. A typical daily charge profile is shown in Fig.2.

3. Traction batteries are designed for cycling duties. There are a number of different types available and the considerable amount of development work currently in progress promises quite interesting changes. Improvements in performance will probably make these batteries the most important for remote area power supply applications. Traction batteries are suitable for diesel, wind or photovoltaic cell primary power sources.

Traction batteries up until recently have been manufactured using antimonial lead alloys in both the positive and negative plates. They have been used mainly for forklifts, mine locos, submarines and other applications demanding large numbers of regular deep discharge

cycles. This was achieved by using more expensive, high quality microporous separators such as polyethylene, deeper sediment chambers and a specially formulated heavier grid alloy composition (particularly for the positive grid) to optimise performance. A further improvement has been achieved by the introduction of tubular construction for the positive grid. This arrangement reduces the surface area of the positive grid directly exposed to the electrolyte. The remaining exposed parts are now further away from the negative plates, which has reduced treeing and internal short circuits. The specially arranged circular separator sleeves help to obtain a more intimate contact between grid and positive active material, which also improves performance. The battery does however have to be over-charged to retain full capacity causing the need for regular topping-up with good quality water.

These batteries are designed to give 1500-2000 deep cycles and should last 5-6 years even if cycled to 80% of their full capacity. Traction batteries are not the right choice for float operation and do not last longer if not cycled. The reason for this is the inevitable negative plate poisoning. The antimony in the positive plate is oxidised and is re-deposited (reduced) at the negative plate. As a result, the hydrogen over voltage at the negative electrode is lowered and because of this low gas evolution potential the battery cannot be charged up and will not maintain its capacity.

Current development is mainly concentrating on improved performance in this area. Investigations and test results show that it is possible to reduce the antimony content in the positive grid to about 1.6% without any loss in cycling performance, but completely antimony free special positive grid alloys and hybrid arrangements are also being considered. The negative grid in the hybrid battery is usually a lead calcium alloy. The more interesting and important battery constructions, in this respect, are the low antimony positive and lead-calcium negative tubular battery developed in Italy and the practically antimony free tubular battery developed in Sweden.

The low antimony type is claimed to have low self discharge, high electrical efficiency, very low water consumption and good float charge characteristics. These are important features which make these batteries equally suitable for cycling as well as float service. The graph of relative water consumption versus antimony content in the grid (Fig.3) shows the critical importance of the low antimony concentration. The float current for this type of battery at 2.22 volt is about 0.1 mA/Ah, which is a very low value and is comparable or slightly better than float currents for the standard stationary battery. If all these characteristics can be realised together with its low maintenance and reliability, this battery could be very suitable for systems using photovoltaic primary power for charging because the cycling and long life features appear to be complimentary.

4. Finally a short discussion on sealed, maintenance-free batteries. These systems were initially developed for the S.L.I. market, consequently they are not new or different types with regards to their application. The construction uses either starved, gelled

or restricted volume electrolyte with or without the recombination technology. The positive and negative grid material is usually a lead-calcium-tin alloy, but it can be manufactured in a hybrid arrangement as well. They have obtained wide acceptance in the S.L.I. field, however their use in stationary and float applications is quite recent and acceptance reasonably slow. This reluctance is understandable because the product must initially prove itself for long life float duties and this takes time, but accelerated life testing has proved to be very unreliable.

Their main attraction in small power reserve applications is that the units are "office compatible". They are sealed and maintenance-free and do not need any water addition during their entire service life. However, they do not tolerate overcharge, very deep discharges or cycling duties. In this respect they have certain disadvantages when compared to conventional, vented batteries. For power reserves in remote area power supplies with either regular or irregular duty cycles sealed batteries at present cannot be recommended and they should not be the first choice. One particular notable exception can be made to this rather general statement. In very remote, inaccessible areas requiring a power supply with shallow duty cycles at low rates of discharge they may have an economical advantage over the standard stationary float cells because they can withstand vibration during transport much better. In such situations a more frequent, but planned replacement could be more acceptable than the uncertain fate and probable damage the standard battery may suffer over a long rough trip to the site.

Battery Maintenance and Testing

When the requirements for a power reserve system have been established, selection of the right type and size of battery to be used must be based on reliable data. Information on the correct installation must be obtained and followed for optimum service life. After installation and commissioning according to the manufacturer's recommendations, the next and perhaps most important step is to decide on the proper maintenance practice. The actual work to be carried out and the type of records which should be kept depend to a large extent on the application of the system (float or cycling operation, shallow or deep cycling, short or long power reserve etc). The maintenance routine also depends on the type of battery selected for the job (e.g. stationary, long life, traction battery flat or tubular, sealed maintenance-free battery etc.). For certain batteries some of the steps are more important than others. For example the sealed battery obviously does not need water addition, but their charging condition requires much closer tolerances and control than that acceptable for vented cells.

Visual inspection is considered to be the maintenance practice which should be performed most regularly and it is equally important regardless of the system used. It involves the careful examination of both external and internal battery components. As battery electrolyte is very corrosive, any seepage or excessive gassing can produce a thin acid layer, which either by chemical or

electrochemical action can interfere with electrical contacts. When cable connections develop high resistance junctions they are dangerous, not only because the entire system may fail but they can also be a source of explosion through spark generation. Apart from the external inspection for obvious corrosion sites, it is suggested to re-tighten bolted connections by torque wrench at regular intervals. This is not required for burnt-in inter cell contacts. Internal inspection is not possible with non-transparent battery cases but it can provide very useful information where clear containers are used. The most immediate observation is to establish the topping-up requirements. It is also possible to see any excessive sediment present due to active material shedding, treeing between plates could indicate internal shorts or faulty separators in the cells. Plate growth, faulty commoning bars, post corrosion at electrolyte level or under the grommet would all indicate higher than acceptable impurity concentrations either in the electrolyte or in cell components. It is better to have the opportunity for planned preventive action rather than a battery which fails without warning. In this respect, transparent battery containers do have some advantage.

For flooded type batteries the recommended electrolyte level has to be maintained by using good quality distilled or de-ionised water. Topping-up should be carried out at the completion of a charging cycle. Acid density measurements should be taken but care is required in their interpretation. A low density figure could indicate a partially discharged battery but it could be the result of acid stratification, particularly if the recharge is carried out using the float potential. It may take several weeks before the density of the acid above the plates shows the correct value. The quality of the acid used in the battery is also important. Cationic impurities can reduce the hydrogen and oxygen over-potentials, which would effect charging. Anionic impurities can produce positive plate corrosion.

Individual cell potential readings are important. Low potentials could indicate internal shorting in the cell, as part of the float current is being used by the short itself and does not assist plate polarization. The distribution of individual cell potentials is also useful information and may indicate the need for an equalizing charge. More detailed information can be obtained if individual plate potentials are measured against a reference electrode. Fig.4 shows the potential distribution of a 24 cell battery bank. It was on open circuit for sometime before it was put on float at 2.2 volt per cell. Potentials were measured after 3, 10 and 30 days on float. The open circuit potentials were reasonably uniform with an average of 2.081 volt. The initial distribution on float improved after 10 days, but after 30 days only 67% of the cell potentials were within ± 20 mV of the required potential. Fig.5 shows the condition of the positive plates, indicating a general improvement in plate uniformity with time, however the average plate potential shifted towards less positive values. This may not be desirable as the grid potentials are approaching dangerously corrosive values. Fig.6 shows the condition of the negative plates, indicating very uniform conditions initially. It remained uniform for 10 days with only a

slight shift in the average potential. However after 30 days some of the plates became polarized much more than others. It appears that the negative plates were self-discharged more than the positive plates, this is probably due to the oxidation of lead by the generated oxygen. The initial potential is affected by the oxygen recombination reaction and only part of it is due to hydrogen evolution. As the recombination reaction slowly disappears, the plate potentials will be determined by the evolution potential of the hydrogen more and more. The change is very slow and depends very much on individual plate conditions, consequently cell uniformity will not be achieved for some time.

The positive and negative plate potentials in a cell on float are determined eventually by the oxygen and hydrogen evolution potential. There is no active material involvement in this water decomposition reaction and the condition cannot be used to ascertain charge/discharge performance. Equally the float current and float potential cannot be used to calculate internal resistance of the cell. Float potentials are usually specified by the manufacturers and for optimum service life it is advisable to adhere as closely as practicable to these suggested values. Float current are quite low for present day stationary batteries. The values are well under 1 mA/Ah with some as low as 0.1 mA/Ah at room temperature. This depends very much on the particular battery type. The condition is also temperature dependent. Fig.7 shows the approximate change of float current with temperature for low antimony positive types.

Discharge tests at the selected rate are the only means of determining battery condition and the actual available power in reserve. However, capacity determination is time-consuming and it is also necessary to consider that the battery will not be available in case of an emergency during the discharge test and for some time after while it is re-charging. If the battery is used for shallow cycling or float operation, it is advisable to test discharge it once every one or two years, particularly during the later part of its service life. The available capacity depends considerably on the rate of discharge. It is important that the discharging current is comparable to the actual load. Fig.8 illustrates how the reserve capacity of a 1000 Ah capacity battery (at the 10h rate) changes with discharging current. Capacity is usually determined to an end of discharge potential. Fig.9 and 10 show how the discharge potential of a stationary cell changes while being discharged at the 3 and 10 h discharge rates together with the corresponding positive and negative plate potentials.

Several different techniques can be used for charging. The selected charging method depends partly on the type of battery and to some extent on the available charging time. Constant current charging can be used for vented cells. For batteries used in float service it is desirable to charge at the 10h rate initially and not higher than the 5-7h rate for batteries on cycling service. As the battery is approaching the gas evolution potential (¶ 2.35 - 2.4 volt/cell) the charging current has to be reduced to the 20h rate to finish the charge. This is necessary to avoid shedding. Cell potential during charge is shown in Fig.11. Another charging method used is constant

potential. As the battery potential increases the current tapers off to a trickle, so sometimes this is called tapered charging. The charging method which can be used for sealed batteries in particular is constant current constant potential charging, which is also called current limited constant potential charging (Fig.12). In this case current is kept constant initially until the battery potential reaches a pre-set value. At this potential the system goes into a constant potential mode and the charging current will decrease as the battery approaches a fully charged condition. This charging method can be advantageously used to optimise service life.

At 25°C the recommended charging potential is about 2.35 volt/cell and Fig.13 shows how this varies with temperature. It can also be seen in Fig.14 that the available cycle life depends not only on the depth of discharge but also on the subsequent charging potential used. A shallow discharge requires a lower end of charge potential for optimum cycle life, if a 16h average charging time is considered.

It is advisable to keep accurate records of the condition of the battery. A log-book should contain the potential and density readings of the pilot cell taken at regular intervals as well as the entire battery when determined. Records of water additions should also be kept to see any trend or changes which may develop during service. Capacity results, together with potential readings during both discharge and charge periods, are also necessay for subsequent assessment.

Finally, people maintaining batteries should be aware of the inherent dangers which may be present. High voltage, high current, the possibility of explosion and fire hazards are all important considerations. A first aid kit should be at hand together with the necessary protection equipment: overalls, face shield or goggles, safety boots, eye wash bottles, water, sodium carbonate to neutralize acid spills etc. Maintenance work has to be done for reliable service, but it must be carried out safely.

Conclusion

Power storage systems are a very important part of "stand alone" power supplies for most applications. The total cost of the system and the cost of the battery should be considered carefully. In this respect it appears that batteries designed for stationary application are suitable if other factors (e.g. service reliability, battery power for extended period etc.) neccessitate considerable power reserve. If the power system is designed for cycling operation, the use of traction type batteries is almost mandatory. There is a very important trade-off between depth of discharge and service life; present studies on battery developments are expected to produce appreciable performance improvements. Sealed maintenance-free batteries may have some attraction for special application, but in general, for "stand alone" power supplies (particularly with cycling duties) they are not considered suitable alternatives to traction batteries.

Correct maintenance procedures are important for safety, system reliability and optimum service life.

3821p

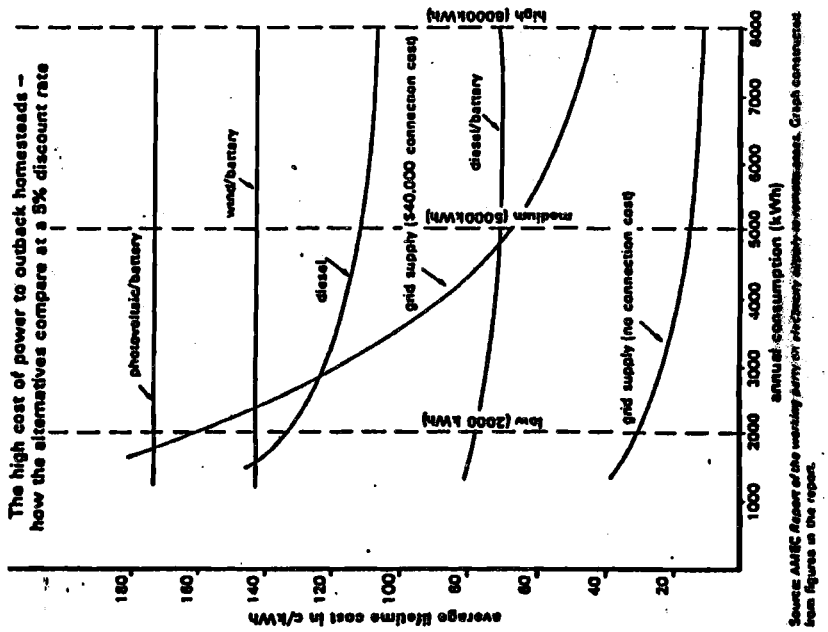

Fig. 1

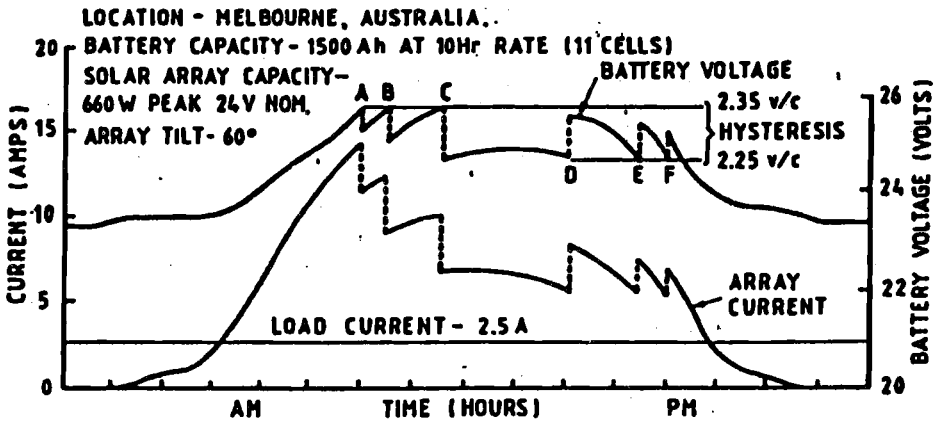

Fig. 2

Multiple 'Switching' Regulator Operation

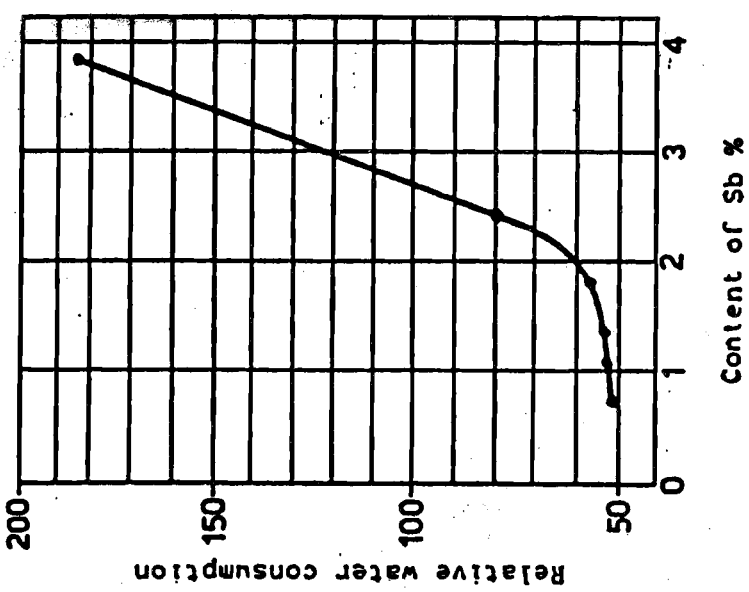

Water consumption for floated batteries vs percent content of antimony in the alloy.

Fig. 3

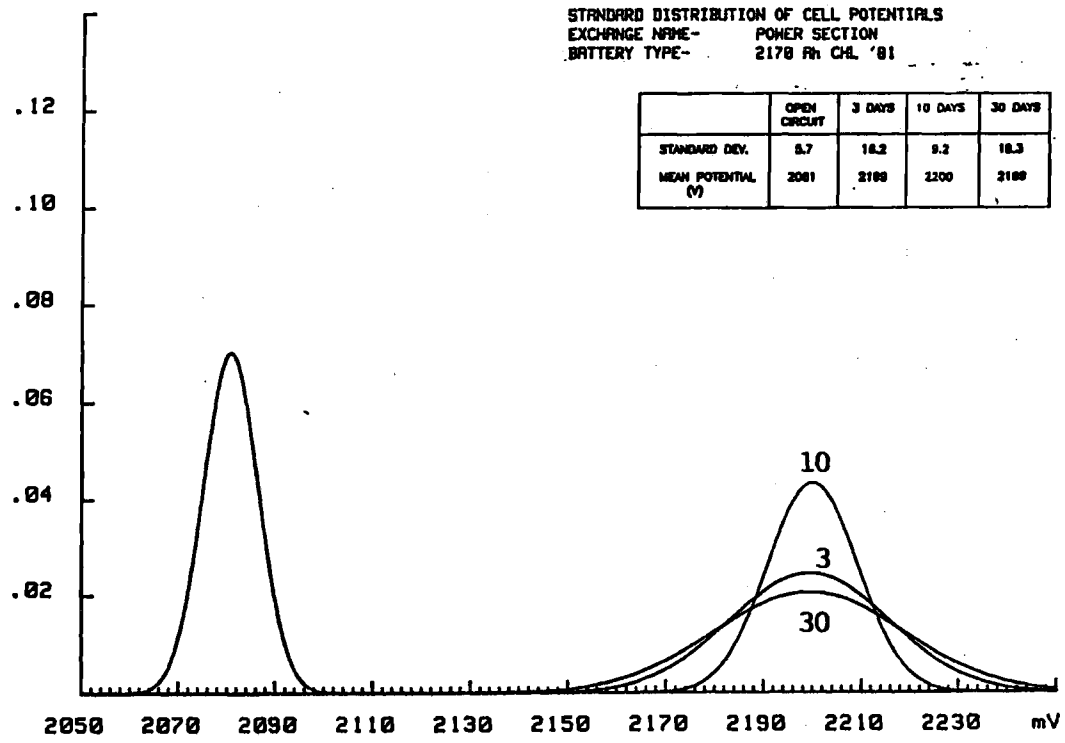
STANDARD DISTRIBUTION OF CELL POTENTIALS
EXCHANGE NAME- POWER SECTION
BATTERY TYPE- 2170 Ah CHL '81
OPEN CIRCUIT
3 DAYS
10 DAYS
30 DAYS
STANDARD DEV.
5.7
16.2
9.2
18.3
MEAN POTENTIAL (V)
2081
2188
2200
2188
.12
.10
.08
.06
.04
.02
10
3
30
2050
2070
2090
2110
2130
2150
2170
2190
2210
2230
mV

Fig. 4

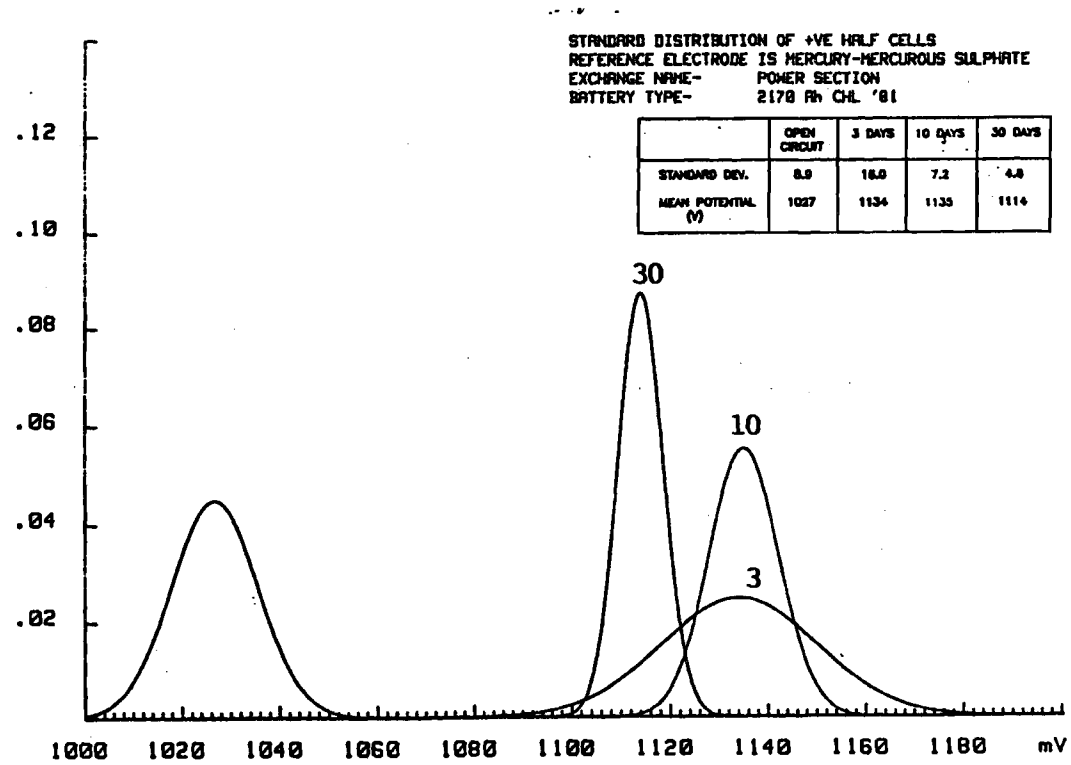
STANDARD DISTRIBUTION OF +VE HALF CELLS
REFERENCE ELECTRODE IS MERCURY-MERCUROUS SULPHATE
EXCHANGE NAME- POWER SECTION
BATTERY TYPE- 2170 Ah CHL '81
OPEN CIRCUIT
3 DAYS
10 DAYS
30 DAYS
STANDARD DEV.
8.9
16.0
7.2
4.8
MEAN POTENTIAL (V)
1027
1134
1135
1114
.12
.10
.08
.06
.04
.02
30
10
3
1000
1020
1040
1060
1080
1100
1120
1140
1160
1180
mV

Fig. 5

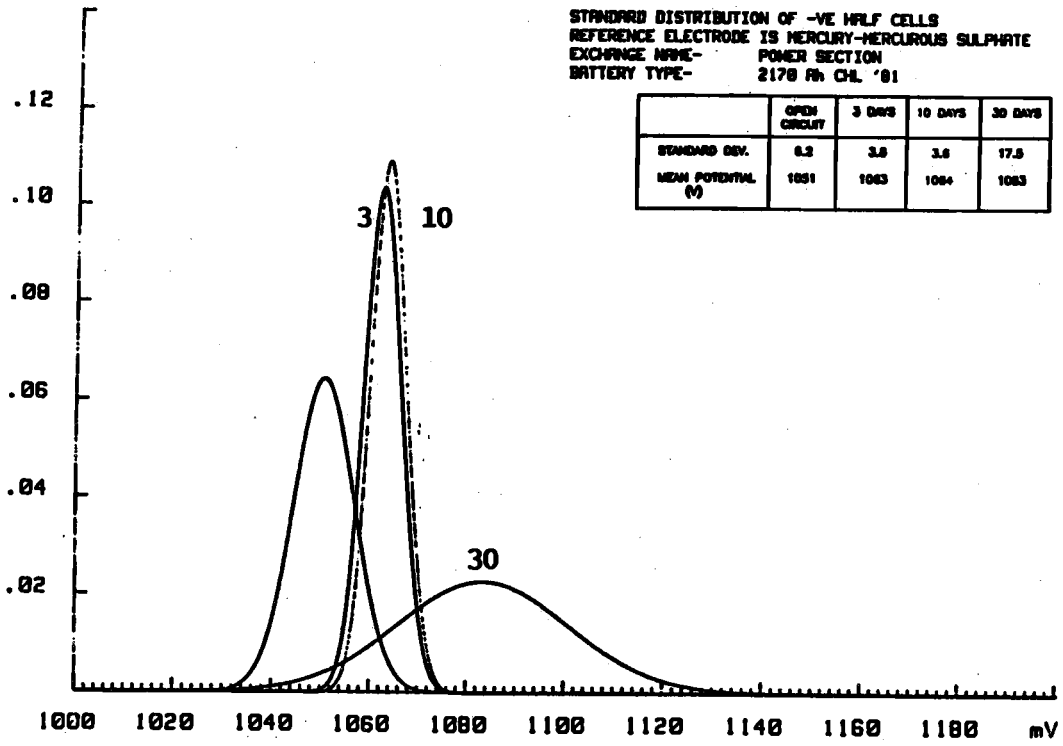

Fig. 6

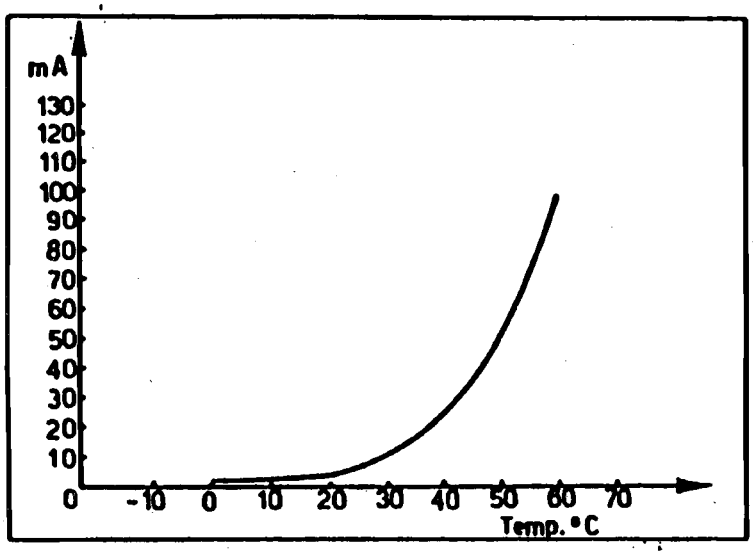

Float voltage current at 2.22 Vpc vs temperature.

Fig. 7

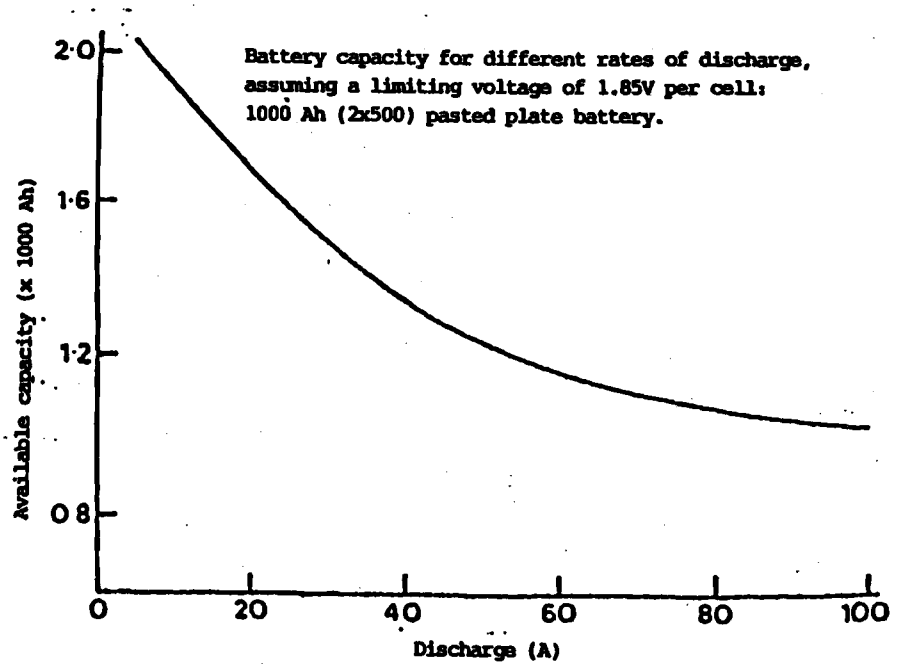
Battery capacity for different rates of discharge,
assuming a limiting voltage of 1.85V per cell:
1000 Ah (2x500) pasted plate battery.
Available capacity (x 1000 Ah)
2·0
1·6
1·2
0·8
0
20
40
60
80
100
Discharge (A)

Fig. 8

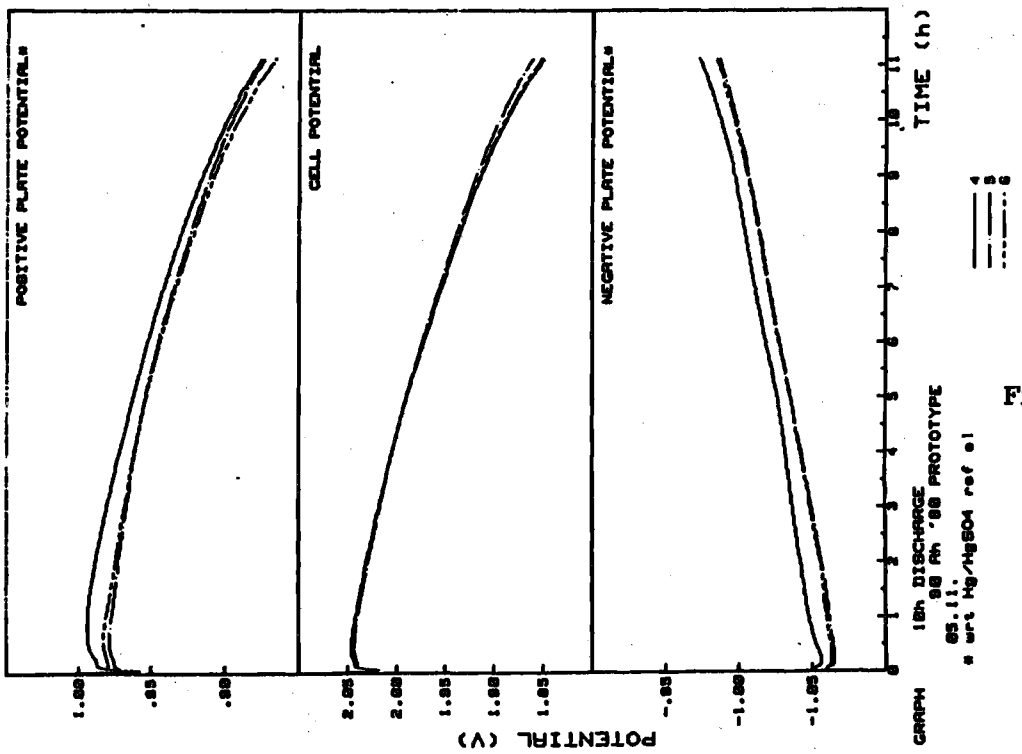
POSITIVE PLATE POTENTIAL
CELL POTENTIAL
NEGATIVE PLATE POTENTIAL
POTENTIAL (V)
TIME (h)
GRAPH
18h DISCHARGE
98 Ah '88 PROTOTYPE
25.11.
* wrt Hg/HgSO4 ref el

Fig. 9

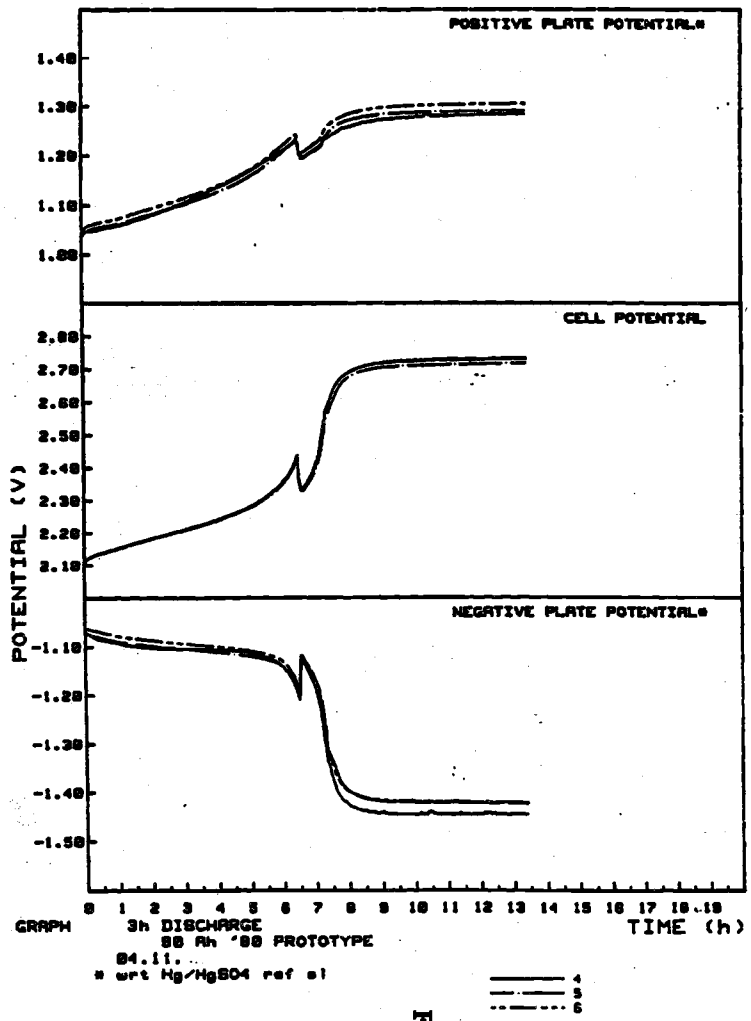
POSITIVE PLATE POTENTIAL*
CELL POTENTIAL
NEGATIVE PLATE POTENTIAL*
POTENTIAL (V)
TIME (h)
GRAPH 3h DISCHARGE
88 Ah '88 PROTOTYPE
04.11.
* wrt Hg/HgSO4 ref el
4
5
6

Fig. 11

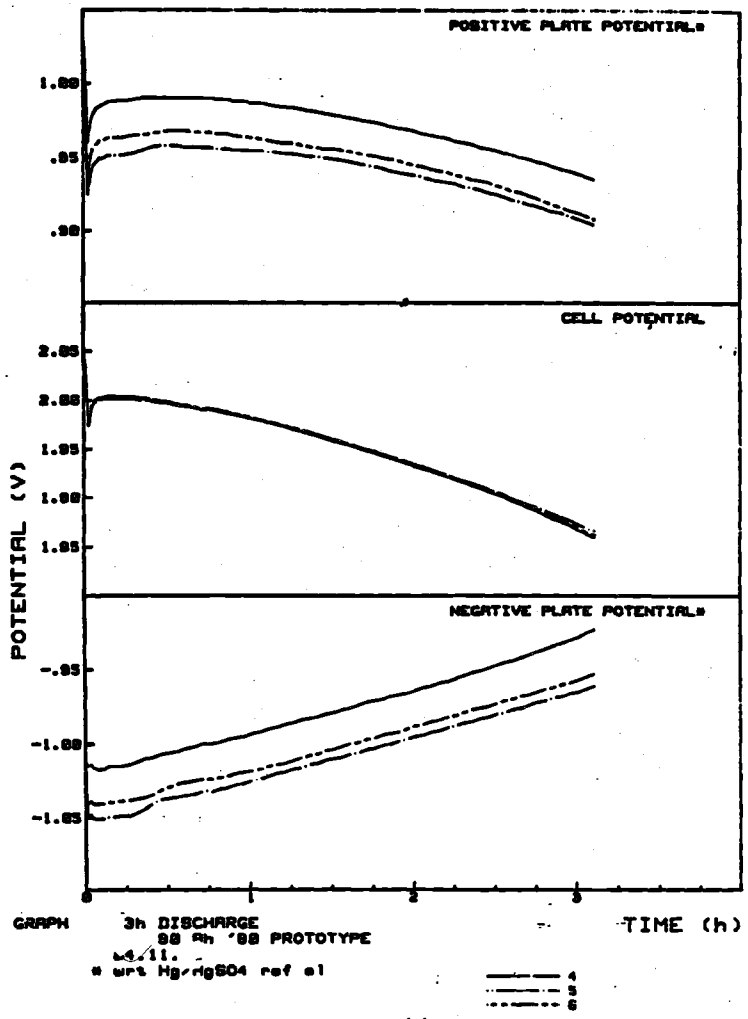
POSITIVE PLATE POTENTIAL*
CELL POTENTIAL
NEGATIVE PLATE POTENTIAL*
POTENTIAL (V)
TIME (h)
GRAPH 3h DISCHARGE
88 Ah '88 PROTOTYPE
04.11.
* wrt Hg/HgSO4 ref el
4
5
6

Fig. 10

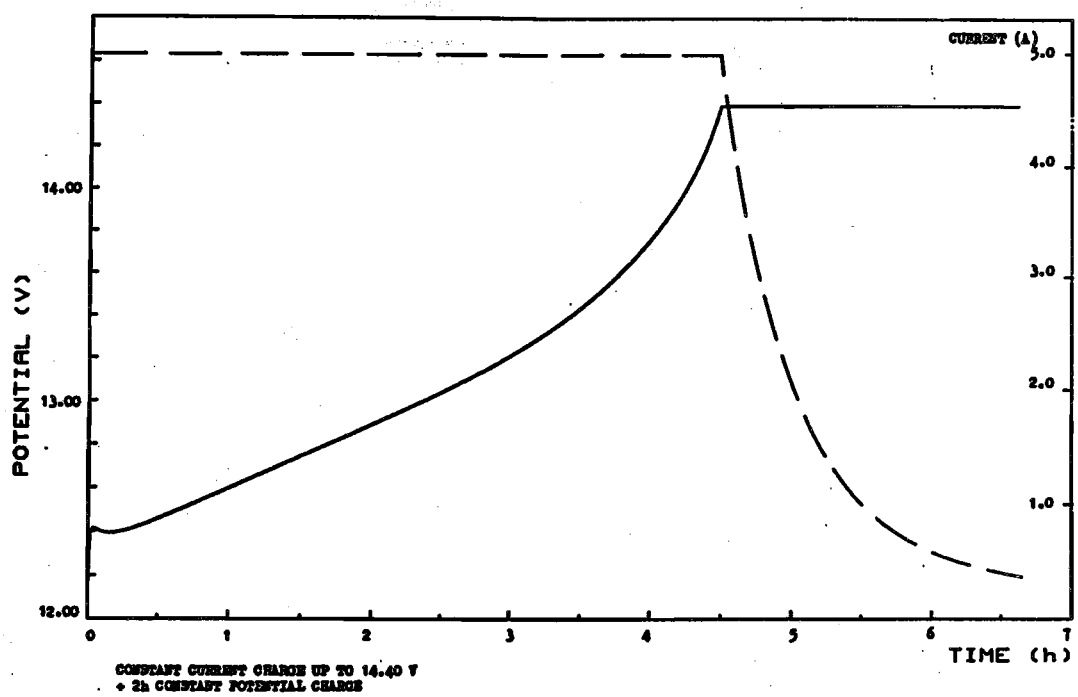

Fig. 12

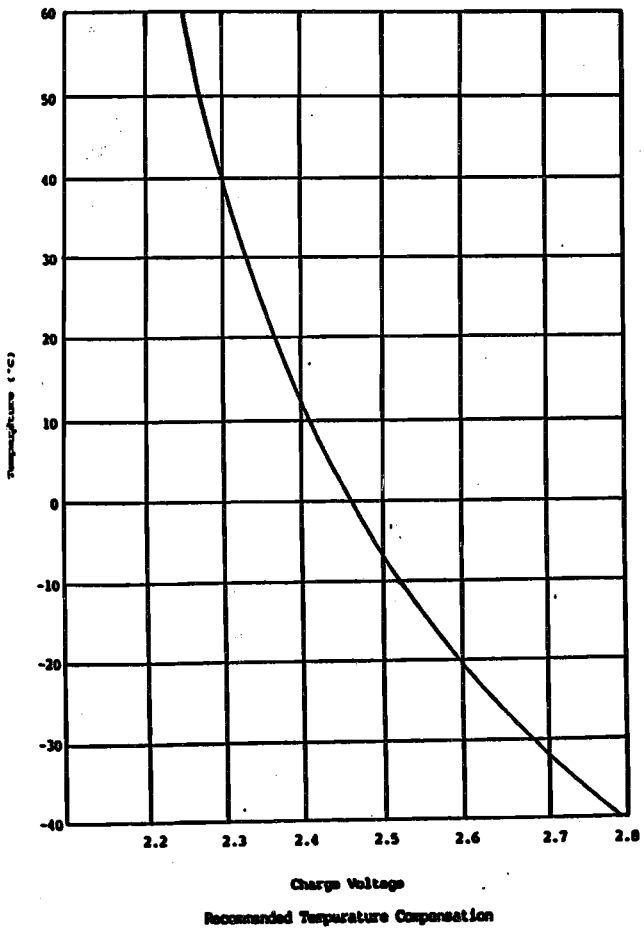

Fig. 13

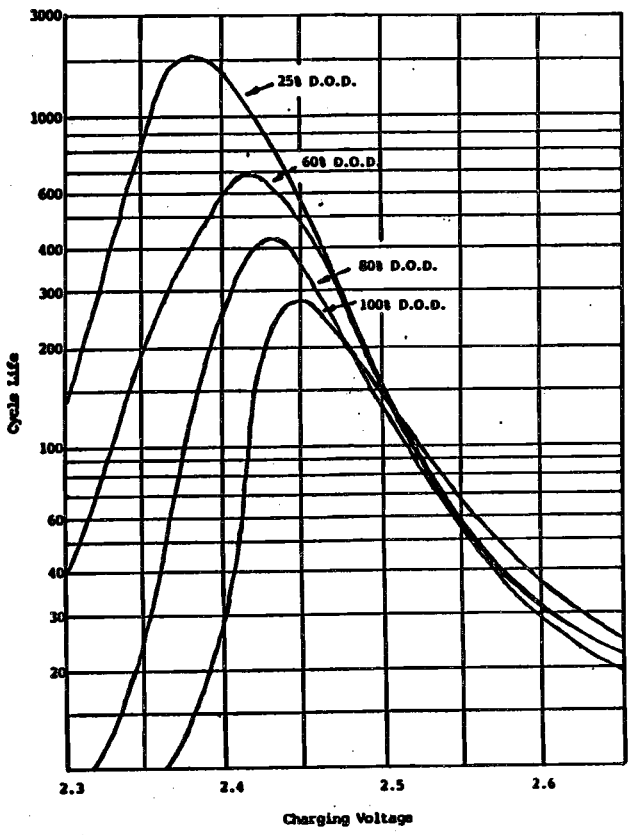

Effect of Depth of Discharge on Life Cycle as a Function of Charging Voltage (23°C), 16 hour charge.

Fig. 14

BATTERIES FOR SOLAR AND HYBRID SYSTEMS

Mr I Watson, Mr B Rudge

Besco Batteries

BESCO
Batteries Division of Sims Products Ltd.
INCORPORATED IN N.S.W.
A Peko Wallsend Group Member

LEADERS IN BATTERY TECHNOLOGY

TLX: AA21886
PH.: (02) 632 0251

HEAD OFFICE: 25 FAIRFIELD ST., (P.O. BOX 1) VILLAWOOD, N.S.W. 2163 AUSTRALIA

BATTERIES FOR SOLAR AND HYBRID SYSTEMS

Many areas in Australia do not have mains power - 415/240 AC - available.

Traditional 'home lighting' comprised a battery set and charging equipment - usually a petrol or diesel engined generator.

In many installations this was supplemented by windmill generators and in some locations by water powered charging.

With increasing demands for more home appliances, diesel alternators supplying either 415v3 phase or 240v single phase 50 cycle A.C. have become popular. Most of these range from about 3 to 10 K.V.A.

These are usually run for set periods each day and batteries used for lighting etc at night.

Demand for 240v A.C. power has increased, and D.C. to A.C. inverters were installed to operate 240v equipment from the batteries when diesel alternators were not running, particularly at night, when noise became objectionable.

Advances in solar power technology and increased costs of operating petrol/ diesel engines have enhanced the viability of alternative engery sources, in particular photovoltaic cell charging of batteries.

Systems can be either pure solar or hybrid, where existing charging facilities are used when necessary to supplement solar power.

Solar sets are usually designed with 4 to 5 days 'sunless' days discharging the batteries by 50% of their capacity.

With hybrid systems, battery capacity can safely be reduced, provided the user knows that he has to supplement the solar charging in bad weather or if he exceeds his normal daily battery drain.

Most 240v diesel alternators have an automotive alternator attached to the diesel engine to charge the starter battery. This should not be used to charge the solar batteries - if they are in a 12v system - because -

(a) The voltage regulator will restrict the charging voltage, with charging current falling to a low value before the batteries are charged.

.../ 2

(b) Running the diesel for this purpose is inefficient.

A suitable battery charger connected to the 240v alternator output will fully charge the batteries in a reasonable time and very little extra fuel is used if this form of charging is carried out when the unit is running for normal purposes.

What batteries are available and which types should be used ?

Types available.

(1) Automotive batteries up to 200 A.H.

These should never be used because they are not designed for discharge - recharge applications.

(2) Semi Traction batteries up to 230 A.H.

These are the Besco Amp Power range and are widely used in solar systems.

They are low cost units, suitable for small solar systems where price is important.

Multiple paralleling is not recommended because minor internal differences are difficult to balance out and uneven discharging and recharging will occur. Bearing in mind there is only a limited amount of energy available for charging, some cells in some batteries may not get their share.

If one cell in any battery becomes defective, all the others will discharge into the faulty battery.

Apart from that, there are a lot more hydrometer tests to be made.

(3) Stationary batteries capacities up to about 800 A.H., with the range extending to over 2000 A.H. in the next few months.

These are primarily designed for float charging from mains power, as emergency power supplies for telephone exchanges, computers, lighting and power in buildings when the mains fail.

They have extremely low self-losses and are widely used in major solar powered communications systems throughout remote regions of Australia. Most of these systems have a constant load and the overall design is extremely reliable.

During summer months batteries operate in the 80 to 100% charged condition and in winter they operate most of the time in the 50 to 70% charged range. This is a 'seasonal cycling' mode and life expectancy is about 8 or 9 years.

The same type of batteries regularly exceed 15 years life on float charge, so you can see the life is reduced by cycling in solar applications.

.../ 3

(4) Motive Power Batteries Individual 2v cells with capacities up to about 1000 A.H.

Prime function of motive power cells is to power electric vehicles, mainly battery operated forklift trucks where the average life exceeds 4 years on a 70 - 80% daily discharge, recharge cycle.

Wide usage exists in traditional farmhouse lighting situations where depths of discharges vary from 10-60% with recharging occurring from 1-7 times per week. Average life is 6-8 years.

Large capacity motive power cells are used for starting standby diesel alternators, fire pumps etc., where the batteries are float charged at 2.25 to 2.30 volts per cell. In many cases life can exceed 10 years, with very few applications providing less than 6 years service.

Pure Solar Systems designed on 5 days to 50% discharge fall between the float and farmhouse duty cycles, therefore good service life can be expected. Hybrid Systems would be nearer to farm house lighting situations, depending on the number of 'sunless' days taken into account in the system design.

The motive power cell containers are thin walled and are not designed to be free standing. Form fitting boxes of rigid material must be used to house the cells. These boxes must be at least to cell cover height.

It is advisable to add at least 1.5mm to each of the cell base area dimensions per cell when designing the boxes. This will cater for any minor manufacturing tolerances and allow insulating material e.g. corflute to be fitted inside the sides of the container.

All inter-cell connectors between cells in each box can be lead burnt using solid lead connectors. The advantage is that the connection is permanent, with no nut and bolt joints to work loose.

Advantages of Stationary Cells All cells have high electrolyte volume enabling capacities up to 25% or more above their nominal 10 hour capacities to be achieved at slow discharge rates without S.G. falling below about 1130. (e.g. 550 A.H. cell gives up to 720 A.H. at 20 day discharge rate).

The cells have extremely low self losses, less than 5% per month on open circuit.

Disadvantages of Stationary Cells Must only be assembled on site, designed for float service and in typical solar service life expectancy is considerably lower than the 15 years achieved in controlled float conditions.

Advantages of Motive Power Cells

(1) Can be pre-assembled and transported provided they are in form fitting boxes.

(2) All connections, solid links, flexible inter-box leads, if needed, can be completed before transport to site.

(3) Life expectancy should be at least equal to pure lead types.

(4) Some cost savings can be achieved, particularly if you fabricate your own boxes.

(5) Wider range of capacities, shapes and sizes of cells gives greater flexibility in physical configuration and more precise A.H. capacity selection.

.../4

Disadvantages of Motive Power Cells

(1) No excess electrolyte. This means that a cell rated at 550 A.H. at the 5 hour rate is still 550 A.H. at the 20 day rate.

(2) Higher self discharge rate, this is usually between 10 and 15% per month on open circuit.

(3) Higher internal losses result in higher 'float' current than equivalent capacity pure lead cells. This could represent up to 3-4% of daily energy input versus 1-2% for a pure lead battery under similar operating conditions.

Operational Notes.

Battery life is very dependent on a number of factors, including :-

(a) Good system design, making sure there is ample solar energy available to re-charge the batteries.

(b) The user understanding the limitations of his system. The best check of the battery condition is by using a hydrometer, calibrated with numbers. Cheap hydrometers with coloured bands only are very misleading.

As a guide

1240 - 1260	is fully charged
1190 - 1210	is half charged
1140 - 1160	is fully discharged
below 1140	overdischarged.

Batteries can be easily overdischarged because they will still deliver usable energy in this condition without any noticeable change in performance of fluorescent lights or entertainment equipment.

If batteries are left discharged or overdischarged for even a day or two the plates will start to sulphate and full capacity may not be recovered.

Users should understand the use of the hydrometer and be educated so that flat batteries are charged by an external charger without delay to avoid damage.

Hybrid systems as outlined above, have these facilities readily available.

(c) Adequate maintenance.

(i) The most important thing is to use distilled or de-ionised water for topping up - not that this happens very often on pure solar systems.

(ii) A regular check should be made on all bolted or clamped connections. They should be kept clean and tight. A smear of petroleum jelly, not grease, will help.

.../ 5

(iii) Battery cleanliness is important. Any moisture on the top of the batteries should be removed because it can form a conducting path which takes energy from the batteries and if it becomes bad enough, may eventually cause damage to the batteries.

NATURAL ENERGY POWER APPLICATIONS FOR MARINE NAVIGATIONAL AIDS

Mr A E Crossing

Department of Marine Operations, Canberra

NATURAL ENERGY POWER APPLICATIONS FOR MARINE NAVIGATIONAL AIDS

A. E. Crossing
Chief Engineer
Installation & Development
Marine Navigation Aids Branch
Department of Transport
CANBERRA ACT 2601

Prepared for:

CAPRICORNIA INSTITUTE

SYMPOSIUM AND EXHIBITION

'Existing Technology for

Renewable Energy Resources'

26-27 September 1985

Introduction

The coastline of Australia is marked by almost four hundred navigational aids whose prime purpose is to assist the safe and efficient movement of shipping. Those aids which lie outside port limits are the responsibility of the Federal Department of Transport; the remainder are under State responsibility.

Table 1 categories the Department's navigational aids and where applicable indicates the number of each type which derives its power from natural sources.

Table 1 - Categories of Marine Navigational Aids operated by the Federal Department of Transport

Manned Lightstations	41	(1S)
Unattended electric lights	151	(57S, 7W*)
Unattended gas lights	102	
Buoys, gas or electric	32	(8S)
Lightfloats, gas and electric	4	
Radio Beacons	11	(2S)
Racons	15	(7S, 1W*)
Decca Navigator Chains	2	(2W)
Omega	1	
Tide Guages	2	
Day Beacons, unlighted	20	

Power Systems S - Solar
W - Wind
* - Common power source

For many people, the large number of unattended gas lights will come as a surprise. (All but three consume acetylene gas; the exceptions use LPG). The reason for this is a combination of historical factors along with the acetylene equipment achieving a remarkably high degree of reliability.

Typical power consumption figures for unattended electric lights is shown in Table 2.

Table 2 - Typical Power Consumption of Lightstation

General Type of Light	Range of Light (km)	Power Requirement Amp. hours/night,	(Voltage)
Minor	8 - 16	6 - 20	12
Medium Intensity	24 - 30	20 - 50	12
High Intensity	32 - 36	100 - 150	12
Buoy	5 - 10	2 - 10	12
Very High Intensity	37 - 42	100 - 460	240

At manned lightstations, the domestic load predominates. Where mains power supplies are not viable, multiple diesel alternator sets of up to 20 kVa rating are employed. Within the marine navaid system it is not expected that natural energy power systems will challenge conventional systems of this capacity in the forseeable future.

Until the introduction of solar powered lights in 1979, unattended minor and medium range electric lights were operated from air depolarized primary cells. Typically these cells were 2 volt modules with capacities of 1000 or 3000 ampere hours.

In many locations, the primary cells failed to deliver their rated capacity which resulted in costly and unscheduled visits to the lightstation. In recent years, environmental factors with the cost and effort of recovering and disposing of spent cells has been a major concern and has provided much of the impetus to introduce natural energy power systems.

The Department's Solar Power System

The solar power units used by the Department are based on proprietary components. The system design is done 'in-house'. As shown in Table 1, 67 land based aids and 8 buoys are currently solar powered. (A further 39 solar installations (conversions and new installations) are scheduled for completion by June 1986.

The Department is encouraged by high level of reliability achieved by the solar power systems and general lack of teething troubles, all of which has led to considerable savings in cost and maintenance effort.

The results have also enabled the Department to plan for further cost savings by way of replacing acetylene lights with solar electric systems. (For an equivalent range of light, both the capital and maintenance cost of a solar electric light

are between 1/3 and 1/8 of those of an acetylene light).

Solar Power System Design

The original design philosophy used for solar power units was basically as follows

- utilize readily available radiation data, rather than to instrument the potential site.
  - monthly solar radiation charts from Bureau of Meteorology are used
  - a 70/30 ratio between direct and diffuse radiation is assumed.
- utilize proprietary comments
  - but solar panels must have a glass face.
- install sufficient solar panels to support the load during mid-winter months
  - and with a safety margin aimed at covering
    : weather variations from year-to-year
    : dirt and bird fouling
    : power system aging effects
- provide a battery capacity to enable between 10 and 20 days operation without input from the solar array
  - but not allowing the battery to discharge below 50% capacity
    : a relay is built into the voltage regulator to disconnect the load at a pre-set battery voltage
- derate the voltage regulation to ensure that electronic components were not working close to their limits
  - regulators were arbitrarily derated to 60% of nominal current capacity.

Early solar installations were essentially based on the use of one type of beacon. For this reason it was convenient to present all design information on a 'standardized' design sheet, as shown in Fig. 1. The division of the Australian coastline into seven zones corresponds to features on the June solar radiation map.

In the majority of cases, there are no direct means of monitoring the performance of the solar power system on a

day-to-day basis. Each light is however inspected at four monthly intervals, when battery specific gravity, and if fitted, the ampere hour meter readings are recorded.

Solar Power Experience

The design approach outlined above has proven to be quite successful and no sites have required additional solar panels. Despite the conservative design approach however, it has been noted that around Torres Strait and to a slightly lesser extent in the Northern Territory, there is minimal safety margin during the January to March monsoon period which is accompanied by long periods of wet and overcast weather.

As experience with solar power increased the design approach was extended to cover some medium range lights and in July 1983, to a high intensity light, north of Darwin: a schematic of which is shown in Fig. 2. Essentially, three minor light power modules have been coupled together to support the load of almost 100 Ah per night.

No standby power system is used and to date there have been no failures of either the power system or the light.

The standardized design sheet used for minor lights has now been replaced with one which caters for 12 volt loads up to 150 Ah per night. The new sheet dispenses with the seven zones and the station's latitude becomes the starting point for sizing the solar array. Other aspects of the original design philosophy are essentially unchanged.

Recent Solar Installations

In April this year, four new solar powered lights were established along Hydrographers Passage. This has opened a new route through the Great Barrier Reef primarily for bulk coal carriers sailing from Hay Point (Mackay) to Japan.

The structures (up to 33 metres high) are built on reefs which are rarely exposed. The most powerful of the lights has a range of 35 km and draws 150 Ah per night.

To minimize the wind loading on both the tower and the solar modules, it was necessary to mount the solar arrays in the lower portions of the tower. This requirement had several consequences.

> during the months November to February, the tower would, at three of the four stations, cause shading of the main solar array

to compensate for this an auxiliary array has been fitted to the southern side of the tower.

During the design phase, it was decided to incline the auxiliary solar arrays at 15 degrees to the south in the hope that rain runoff would keep the panels clean. It is interesting to note that while little bird life was observed during the initial site survey, there has been a dramatic increase in numbers since the structures were established. At this point in time it is not known whether the auxiliary array can be kept clear enough to be effective.

Since these new lights are well off shore, it may not always be possible to attend to a fault condition at short notice. To avoid this situation disrupting the flow of shipping, solar powered standby lights are fitted to each tower. The interesting feature here is that while the main light continues to operate correctly, the (switching type) voltage regulators on the standby power system must hold the solar array 'open circuit' for prolonged periods. Whether there will be any detrimental effects to the auxiliary power system remains to be seen.

In another application of solar energy, the Department has gained over 12 months experience with several solar powered buoys. The system was developed by the Department's South Australia/Northern Territory Region to overcome problems with primary cell battery packs, which in addition to the problems found on land based installations, are prone to spilling their electrolyte.

The deployment and retrieval of ocean buoys is a fairly hazardous operation and any exposed equipment such as the light or protruding solar panels are at risk.

The solar panels are mounted vertically in each of the four bays of the radar reflector. While this is not an optimum configuration from the point of collecting solar energy, the panels are fairly well protected from damage. Furthermore, the cost of the solar power system is still significantly cheaper than the alternatives.

The solar power package developed so far will support most but not all of the flashing light characters used by buoys.

In the current program of solar installations, the Department is using Solarex X100G type panels. Prior to this the Solarex X44 BG and Philips BPX47A solar panels were used.

Wind Generators

The Department has had wind generation operating since

1970. The first two units were provided as part of a 'turn-key' purchase for two Decca radio navigational aids in the Pilbara (WA).

These wind generators are standard 2 kw, 24 volt Dunlite units which each support an unattended radio transmission monitoring facility (average power consumption is 100 Ah per day). In the event of problems, each wind generator is backed up by a small diesel alternator.

The usual wind speeds are about 5 metres per second, and turbulence due to terrain and structures is considered to be low.

Under these conditions the wind generators have performed reliably and without any special attention, although one of the wind generators did suffer minor damage from Cyclone Joan.

The Tasman Is light, east of Hobart was the Department's first attempt at using a wind generator as the principal power unit at a light station. The new power and optical equipment was commissioned in 1976. The power system is an adaptation of the Telecom wind/diesel hybrid used across the Nullarbor Plain and comprises a 2kW, 24 Volt Dunlite wind generator, two 4kW diesel generators standby units and a 1500 Ah lead acid battery bank. The station load is about 220 Ah per night.

The annual average wind speed at Tasman Is is 7 metres per second, however the islands impressive 300 metre high cliffs ensure a high degree of turbulence.

The design approach for the power system centred around modelling the battery charge/discharge cycles for various times throughout the year. It became apparent during this work that the wind generator would not be capable of fully supporting the load and that a diesel would have to start once or twice a month.

To assist the wind generator to survive in the turbulent conditions, a smaller than standard rotor was specified: 3.2 cf. 3.9 metres diameter.

In the early days of operation the sheet metal tail vane was torn away on several occasions. Attempts to attach the tail more securely led to failures of the pylon casting. Regional staff eventually built a twin tail arrangement which has proven to be very successful. Not only did this overcome the tail problems, but the generator now faces the wind more steadily than before and delivers more power.

On two occasions the rectifying diodes in the wind generator have failed, with no other damage apparent. It is thought

.../8

these occurrences may have resulted from lightning strikes.

In order to minimise unscheduled visits to the island, the wind generator is exchanged with a spare unit every 12 to 18 months. The wind generator being returned is then overhauled and tested. This generally involves

- crack testing the blade spindles
- replacing rotor hub bearings
- overhauling the pitch control dampers
- inspecting the stainless steel, sheet metal blades
  - to date the blades have not required any maintenance.

Although the Tasman Island conversion is regarded as an economic success, the complexity of the control system for both the power unit and the light has provided the Department with some valuable lessons. One of these is to strive for simple-but-effective solutions to keep on-site maintenance effort to a minimum. To this end, the Department currently prefers to use a single source of energy and simple controls rather than consider the more complex hybrid systems.

In 1979 an Aerowatt 24 FP7G (24 watt, 12 volt) wind generator was purchased for evaluation. This machine was tested for 12 months at a manned light in South Australia, which interestingly, was home for a variety of species of birds. The wind generator demonstrated that it could easily support a load of 18 Ah per night, and apparently, there were no problems with the bird life. Wear-and-tear on the wind generator was limited to the erosion of paint from the timber blades and tail post.

The wind generator was re-installed in 1981 when the light-station became unattended and again proved to be a reliable unit.

On the basis of the evaluation trials, the Department decided to purchase several more of the small wind generators to operate medium range lights in South Australia and Tasmania.

At that time it was possible to show that the small Aerowatt was cost effective against solar cells.

By the time the order was placed, the 24 watt Aerowatt had been superceded by a 60 watt machine. See Fig. 3.

Unfortunately, the 60 watt wind generator has not proven to be as reliable as the 24 watt unit. After about 12 months operation wind generators from a variety of locations have

.../9

shown signs of heavy wear to rotor hub bearings. Two wind generators have broken away from their towers and another suffered a broken pitch control link after only 4 months operation.

In each case where the wind generators broke away from the towers, a 12 metre mid-hinged, guyed mast had been used. See Fig. 4. While one tower displayed evidence of poor welding around the wind generator mounting flange, it is suspected that a resonance problem may exist.

The mid-hinged mast was introduced as a means of overcoming safety problems being experienced by maintenance staff. The robust wind generator tower used at Tasman Island was acquired at a bargain price and could not be repeated at other sites. In any case, while the top platform is quire large, access to the wind generator still requires the use of a ladder.

Recently a 1 kW, 12 volt Dunlite wind generator was installed at Goose Island in Bass Strait. This machine is mounted on a traditional three legged lattice tower, to which a caged ladder and demountable work platform have been added.

This wind generator is the sole power source for a high intensity light (100 Ah per night). A Tasman Island style twin tail arrangement has already been fitted to this unit.

As Table 1 shows, the Department operates 9 wind generators (7 powering lights). There are however, no firm plans for any more installations over the next few years. In fact, five potential wind generator installations have been abandoned, four in favour of solar power.

Wave Activated Generator

The Department presently has a Ryokusei TG 2 (12 volt, 30 watt) wave activated generator undergoing evaluation on the Breaksea Spit light vessel (near Bundaberg).

The light vessel has provision for two wave activated generators which may be fitted to vertical, open ended tubes (635 mm diameter) built into the after section of the ship on either side of the centre line.

When a TG 2 is fitted, the vessel's pitch and roll motion causes air to be drawn into or expelled from the tube. Flap valves in the TG 2 provide a uni-directional flow of air through a turbine which drives a small alternator.

The TG 2 is presently connected to 10 ohm dummy resistive load via an ampere hour meter. During a recent 95 day period, the machine generated an average of 32.5 Ah per day.

.../10

Ancilliary Equipment

The following provides a brief listing of some of the ancilliary equipment used in the Department's natural energy power systems.

Batteries

- For land based installations, the Chloride Faure-X range of lead acid batteries is preferred for both wind and solar applications. Battery types in common usage are the 2G 22S (2 volt, 225 Ah) and the 2G 660.

- The solar powered buoys are using the new Chloride recombination electrolyte lead battery, type RE 12-65 (12 volt, 65 Ah at 20 hr rate).

Voltage Regulators

- With wind generators, the respective manufacturer's voltage regulator unit has been used with good results.

- Early solar installations used Lucas BVR-12-10 or BVR-12-15 (10 or 15 amps) shunt regulators. These have performed very well.

- Later solar installations have used Solarex SCDR 25-1-14, switching type regulators. Tasmanian and Western Australian Regions have experienced failures with these regulators and no more of this model are being issued. For the present, the Lucas BVR-12-15 regulators have been substituted pending a review of the design deficiencies of the Solarex unit. The main deficiencies have been associated with

  - printed circuit board connectors

  - hand book errors

  - poor weather proofing.

Ampere Hour Meters

- The Pharos (formerly AGA) type 'AHCO-60' (0 to 1 or 1 to 10 Amp) ampere meter is now being used quite extensively to provide charge monitoring information for the majority of solar powered lights (cost is around $300).

Diodes

- The blocking diodes fitted to the output of each solar panel are of the Schottky type to minimize voltage drop.

.../11

Conclusion

The paper has presented an overview of the Department's involvement with natural energy power systems for operating marine navigational aids.

It is clelar that of the three natural energy systems used solar electric systems will have the major role in powering marine navigational aids.

The future role for wind and wave powered generators is likely to be restricted to particular sites where aspects such as large bird populations etc., preclude the use of solar power.

THIRD ANGLE PROJECTION

DO NOT SCALE

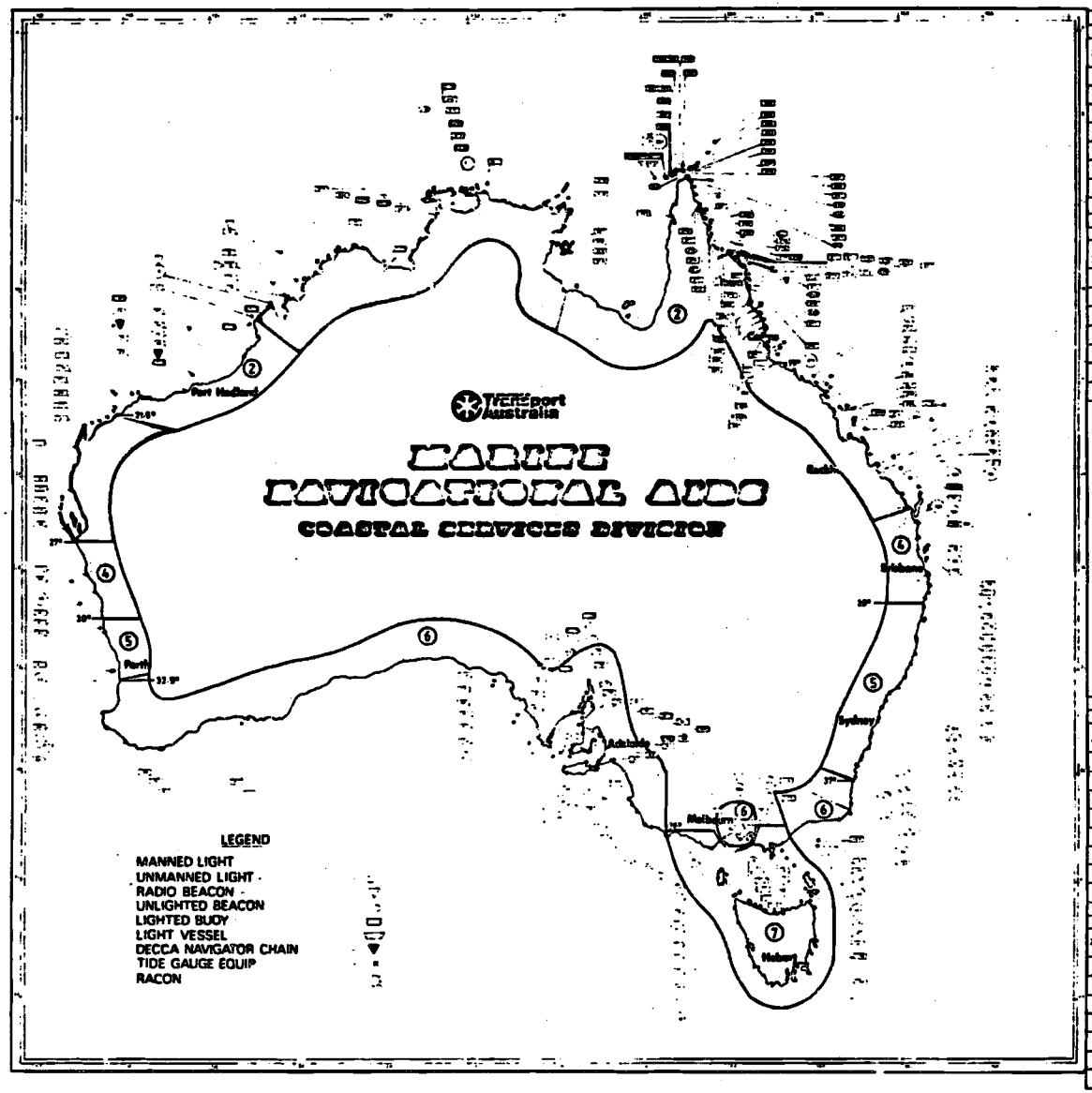

ALPHABETICAL LIST

3·05A LAMP

FLASH LENGTH: 0.5 SECONDS							
DUTY CYCLE		10%		15%		20%	
ZONE	SLOPE OF ARRAY TO HORIZ DEG	NUMBER OF SOLAR PANELS REQUIRED SOLAREX	PHILIPS	SOLAREX	PHILIPS	SOLAREX	PHILIPS
1	30°	2	3	3	4	5	7
2	35°	3	4	4	5	6	8
3	50°	3	4	4	5	6	8
4	60°	4	5	5	7	8	9
5	65°	4	5	5	7	7	10
6	65°	5	6	6	8	9	12
7	75°	6	8	7	10	11	15

FLASH LENGTH: 1.0 SECONDS							
DUTY CYCLE		10%		15%		20%	
ZONE	SLOPE OF ARRAY TO HORIZ DEG	NUMBER OF SOLAR PANELS REQUIRED SOLAREX	PHILIPS	SOLAREX	PHILIPS	SOLAREX	PHILIPS
1	30°	2	3	3	4	5	6
2	35°	2	3	3	4	5	5
3	50°	3	4	4	5	5	[illegible]
4	60°	3	4	4	5	6	8
5	60°	4	5	5	6	6	8
6	65°	5	6	5	7	8	11
7	65°	6	8	6	9	10	14

ALL SYSTEMS TO USE

- PHILIPS PRIMARY OR SOLAREX BASED SOLAR PANELS
- GAP CANNON MODULES
- COLDBOX SPECIAL PURPOSE LEAD ACID BATTERIES, TYPE [illegible] 2 VOLT [illegible]
- VOLTAGE REGULATOR, NOMINAL 12 VOLT
- SCHOTTKY BLOCKING DIODES

LANTERN

- TOPLANE [illegible] OR [illegible] PA 250

2·03A LAMP

FLASH LENGTH: 0.5 SECONDS							
DUTY CYCLE		10%		15%		20%	
ZONE	SLOPE OF ARRAY TO HORIZ DEG	NUMBER OF SOLAR PANELS REQUIRED SOLAREX	PHILIPS	SOLAREX	PHILIPS	SOLAREX	PHILIPS
1	35°	2	2	2	3	4	5
2	35°	2	3	3	4	4	6
3	50°	2	3	3	4	4	6
4	60°	3	4	3	4	4	6
5	60°	3	4	4	5	5	[illegible]
6	65°	3	4	4	6	6	9
7	65°	4	6	5	7	7	11

FLASH LENGTH: 1.0 SECONDS							
DUTY CYCLE		10%		15%		20%	
ZONE	SLOPE OF ARRAY TO HORIZ DEG	NUMBER OF SOLAR PANELS REQUIRED SOLAREX	PHILIPS	SOLAREX	PHILIPS	SOLAREX	PHILIPS
1	35°	2	2	2	3	3	4
2	35°	2	3	3	3	3	4
3	50°	2	3	3	4	4	5
4	60°	3	3	3	4	4	6
5	60°	3	4	3	4	6	6
6	65°	3	4	4	5	5	7
7	65°	4	6	4	6	7	10

REDRAWN

DEPARTMENT OF TRANSPORT AUSTRALIA

NAVIGATIONAL AIDS BRANCH

SCALE: NTS

STANDARDIZED SOLAR POWER SYSTEM FOR MINOR LIGHTS

DRAWING NO: CN-45-218

TITLE: CENTRAL

SHEET 1 OF 1 SHEETS

CN-45-218

FIG 1

THIRD ANGLE PROJECTION

USED ON DRG.

DO NOT SCALE

NOTE: EACH SOLAR MODULE CONSISTS OF 8 PANELS (SEE ITEM 3).

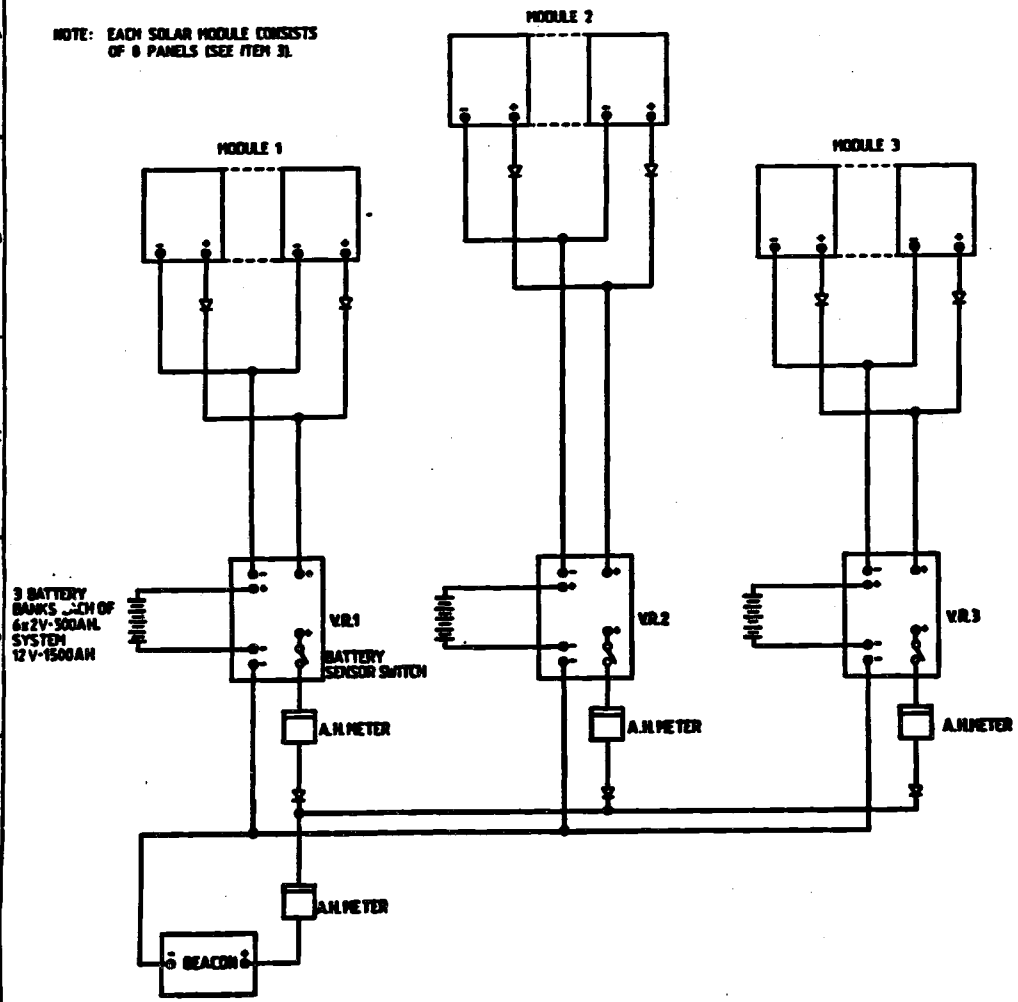

ITEM No.	DESCRIPTION	QTY	IDENT. No.
7	AMPERE-HOUR METERS AGA AMCO-40	4	
6	RECTIFIERS BARRIER SCHOTTKY 3A/40 PRV TYPE VSK 340	27	YH/4553
5	BEACON AGA PRB 24/4	1	
4	BATTERY LEAD ACID 2V-500 A H	18	
3	SOLAR CELL PANEL SOLAREX X4400	24	C158/171
2	SOLAR PANEL CARRIER DRG No. CN-17-175	12	HS/63
1	VOLTAGE REGULATOR LUCAS BVR 12-15	3	V4/929

MATERIAL LIST

1						AMENDMENT

DEPARTMENT OF TRANSPORT AUSTRALIA

NAVIGATIONAL AIDS BRANCH

SCALE N. T. S.

TOL. UNLESS SHOWN ——

SOLAR ARRAY

INTERCONNECTION DIAGRAM

CAPE DON LIGHTHOUSE N.T.

DRAWING No. CN-19-511

OFFICE CENTRAL

SHEET 1 OF 1 SHEETS

FIG

WINDGENERATOR
60 FP 7G

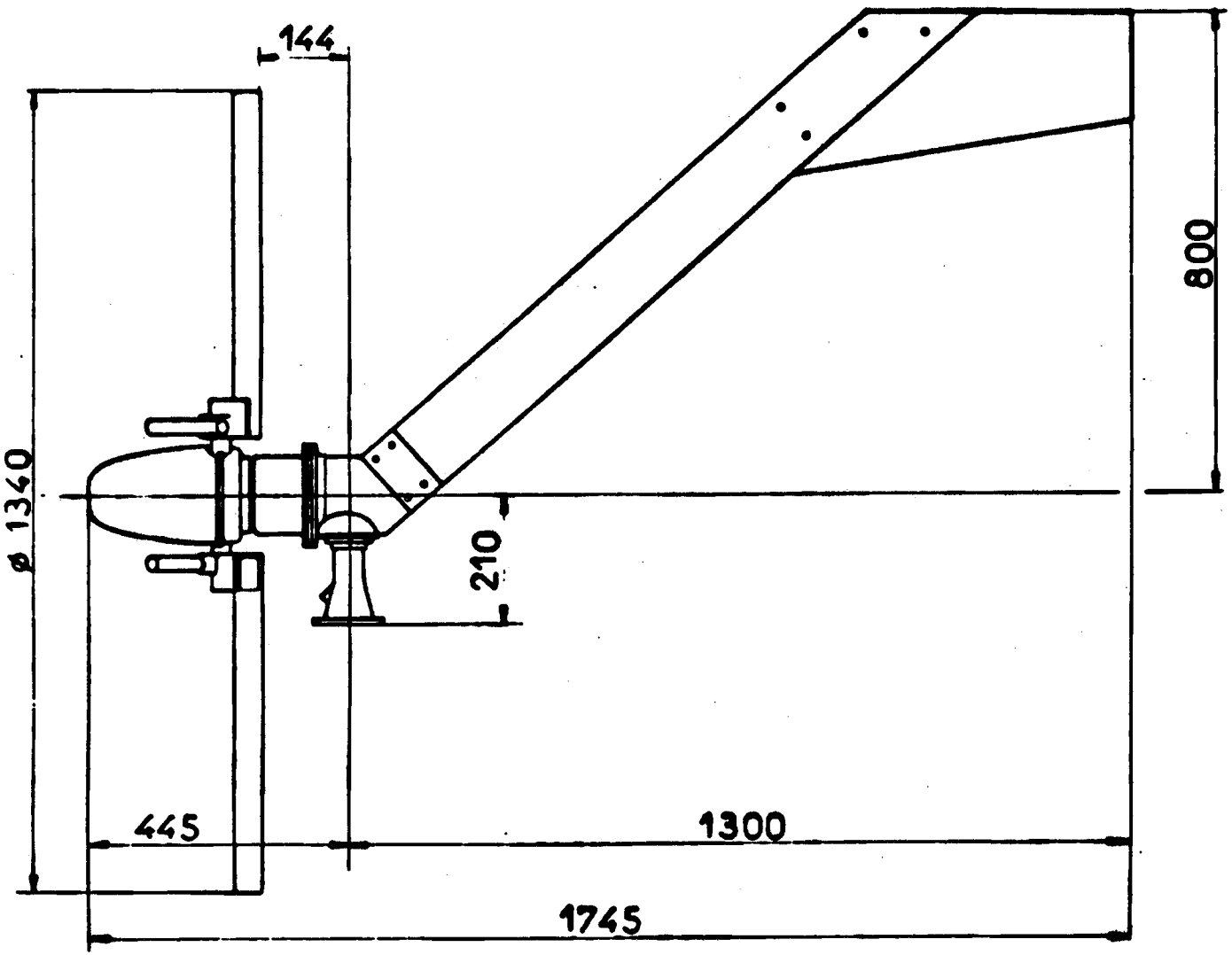

FIG 3

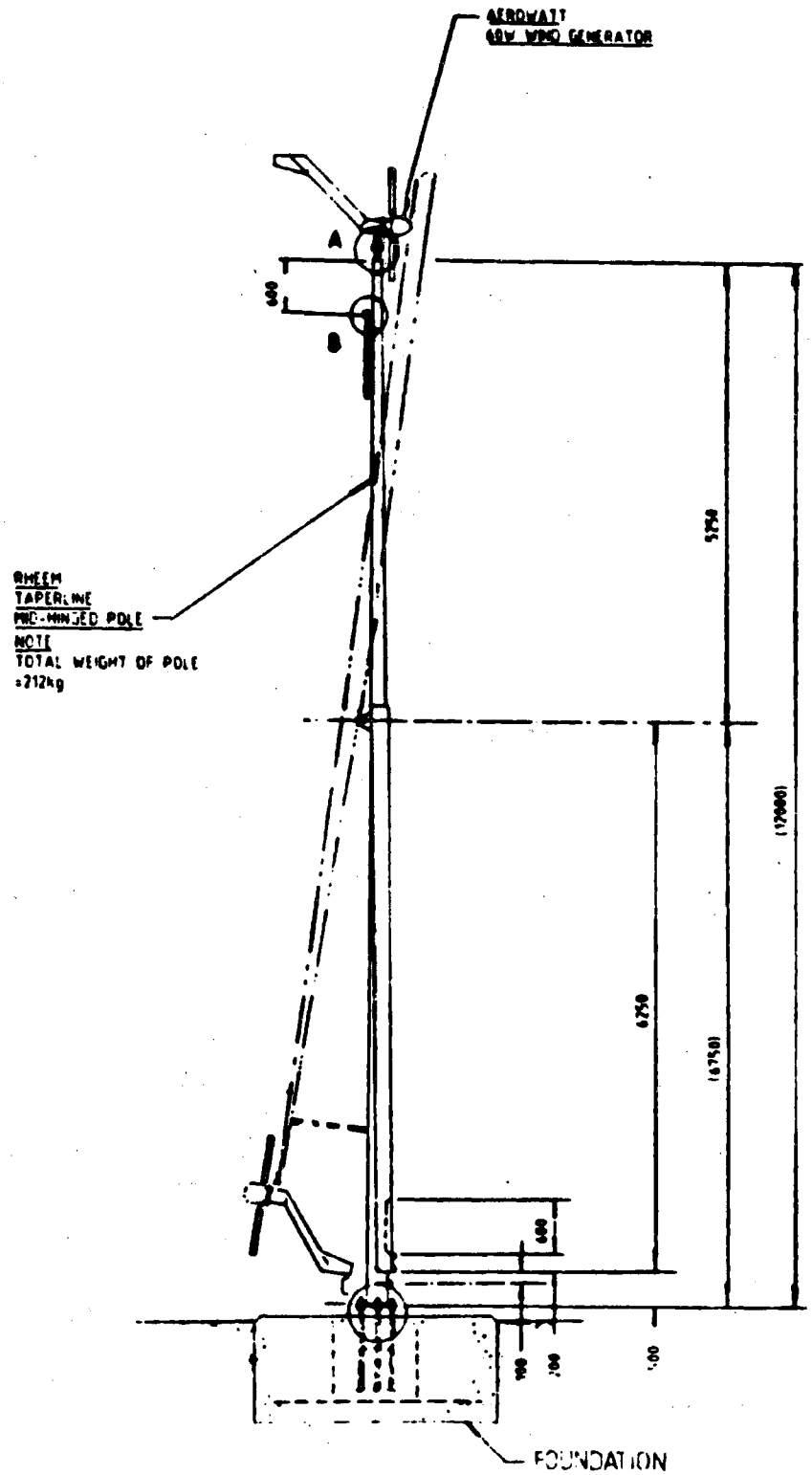

WIND GENERATOR MOUNTING ARRANGEMENT

SOLAR POWERED EQUIPMENT IN QUEENSLAND RAILWAYS

Mr R Shield

Queensland Railways, Central Division, Rockhampton

SOLAR POWERED EQUIPMENT IN QUEENSLAND RAILWAYS

In the operation of a Railway System, the function of railway signalling is -

(a) to prevent loss of life or damage due to collision or derailment.

(b) to facilitate the efficient operation of trains throughout the system by assuring the maximum use of existing track facilities with a minimum loss of time.

The track circuit, which was invented by Dr. William Robinson and first installed on the Philadelphia and Erie Railroad USA in 1872 is the most important link in the signal system. It is the medium of connection between the moving train and the signal or other device provided for protection.

The most commonly used and simplist track circuit is the DC track circuit. A track circuit in its simplist form is an insulated section of track with a relay at one end and a battery at the other end. It consists of -

(a) a battery.

(b) A limiting resistance called a track feed resistance.

(c) rails and rail bonding.

(d) insulated joints.

(e) a track relay.

Figure 1 shows the principle of operation. When the track circuit is unoccupied, the track relay is energised. When the track circuit is occupied, the action of the wheels of the train cause the relay to become de-energised.

A primary cell with a terminal voltage of approximately 600 millivolts is the most commonly used source of power for DC track circuits. Two cells are usually placed in parallel to increase the current capacity of the battery and to guard against the possibility of early failure of one of the cells. This arrangement of cells usually has a useful life of 1½-2 years, after which they need to be replaced. The typical track voltage is 600 millivolts.

The battery replacements are catered for in maintenance programmes, but it is desirable to reduce maintenance and, therefore, costs of both materials and man-power to a minimum. To achieve this aim, solar track feed units have been designed and are in operation at various locations throughout the State. Wind generators were tested at a few locations, but were found to be less reliable than solar energy. A few of the locations with solar track feeds include the Jilalan to Hay Point Line, Blackwater to Laleham Line and Blackwater to Gregory Line.

The solar track feed units are very simple in design and operation, and it is this simplicity that gives it very good reliability. It consists of the solar modules, storage batteries, a variable track feed resistance, a transorb used for lightning protection, and a Schottky blocking diode to prevent reverse leakage current under dark conditions.

cont..2/

The solar module is a Tideland Twin solar module type GG 10412/10412/2. This module gives a 2.62 load voltage output with a short circuit current of 3373 milli-amps.

There is no form of external voltage regulator in this system, due to the self regulation characteristics of the solar module, when matched to the load, as will be described in a later section.

The batteries are a RVP22,220 amp-hour Nickel-Cadmium battery. In the design, a single battery is used. Nickel-Cadmium batteries have been used because they have some advantages over lead acid batteries. They exhibit low self discharge losses, and are more tolerant of accidents than are lead acid batteries. For example, they will fully recover from freezing where the electrolyte becomes slushy, and from complete discharge to zero volts. Excessive overcharging will not damage the battery, but water lost from the electrolyte must be replaced.

It is even advantageous to allow the battery to occasionally overcharge. This is because the batteries are operating under conditions which allow for electrolyte stratification, which occurs when the batteries are stationary, and charging and discharging currents are low. By allowing the battery to overcharge, a mild gassing of the electrolyte occurs and hence mixing.

However, the advantages of Ni-Cad batteries are offset by the high cost, voltage inefficiency (charging voltage 15% higher than discharging voltage compared to 5% charge for lead acid batteries), and lower voltage per cell resulting in more cells to a given battery voltage than lead acid systems. This last factor is not a problem due to the low system voltage.

The track feed resistance is used to adjust the voltage at a relay end of the track circuit. It is necessary to have this adjustment to enable the relay to operate properly, allowing for losses.

The losses are of two types, one caused by losses in the connecting wires used, and the other by leakage current which flows continuously through the track ballast.

In this case, the track feed resistance is variable from 0 to 4.077 by shunting out resistances to reach the desired value.

The equipment layout and the design of the solar track feed unit is shown in Figure 2.

Solar powered flashing lights have also been used at level crossings in a few locations, one of which is Wilmington near Townsville.

Two designs have been made which vary only in the type of solar cell used. One design uses Tideland GG 3241/12 self regulating solar cells. The cells are mounted in a frame 1030 x 533 x 55 mm which is adjustable to the desired position. The plans for the frame are shown in Figure 3. The current/voltage curves for a single module are shown in Figure 4. In general, operating at other than standard conditions will alter the output of the module as a near linear function of temperature and light intensity. The temperature coefficient for module power output is about 0.4-0.5% per degree C. From the curves, it can be seen that a module will supply about 2.2 Amps at a nominal voltage of 14V. The values are at standard conditions of 100mV/sq.cm light intensity and 25 degrees C cell temperature.

cont..3/

The major factors influencing the choice of storage batteries were, the battery type required, the voltage and the ampere-hour capacity. A lesser consideration is the environment in which the battery is used. Since the temperature range between winter and summer is not large compared to countries such as Canada, this factor was neglected. The most commonly used batteries for solar applications are lead-acid and nickel-cadmium batteries. In this design, lead-acid batteries were used. The system voltage required was 12 volts.

A set of eight railway produced lead-acid batteries connected in series was used. The batteries are 2 Volt 180 AH deep cycle batteries.

The charging efficiency of the battery was also an important factor. The solar panel charges the battery in a constant current fashion, until the battery reaches 90% of full capacity. As the battery reaches and exceeds 90% capacity, the solar array current decreases rapidly with increasing voltage. This provides a self regulating mechanism if the panel voltage and current outputs are matched to the load. However, an external regulator is needed if the panel output exceeds the load by more than 30%. In this case, the load required was typically 13 volts at 1.5 Amps and a regulator was needed.

The regulator has been designed so that the main solar array battery system can work at maximum efficiency when the battery is less than fully charged. In this state, the regulator only consumes about 0.03 Amp-Hours per day and introduces no extra voltage drops in the system. When the battery voltage exceeds an adjustable preset level, the regulator proportions the current so that just enough passes into the battery to keep it fully charged and the remainder is shunted through a dummy load. The circuit schematic is shown in Figure 5. The unit used was produced by Lucas Industries and is the BVR Series Battery Voltage Regulator. It has a typical regulating voltage of 14.4 volts DC at a current of 2.5 Amps.

Reliability and stability have been built into the voltage regulator, and a 723HM integrated circuit was used. This industry standard contains a stable voltage reference, a high gain differential amplifier and an output stage with moderate current handling ability. The temperature and long term drift stability of this voltage reference, the 1% metal film resistors, and the cermet trim potentiometer used in the circuit provides tight regulation of better than 0.5% for 1mA to full array current passing the shunt path. The HM version of the 723 is a full military temperature range (-55 degrees C to 125 degrees C) device hermetically sealed. If a failure were to occur, the most likely events would result in the shunt path being open circuited, leaving the solar array-battery functioning in a normal, non-regulating manner.

A blocking diode is used to prevent current flowing from the storage battery to the solar module at night. The diode is placed in series between the module and battery as shown in Figure 6, Part D.

The amount of solar radiation received and the daily energy demand are the two controlling factors in the design of photo-voltaic systems. The selection of raw insolation data to be used in the design of a solar array system is dependent on the location and meterological conditions prevailing between the data station and system location. Other contributing factors are the units in which the sunlight data is expressed, the source of the data, the various types of detecting instruments used, and the period over which the data was accumulated.

cont..4/

The design of the solar powered flashing light installation was carried out in 1976 and it is envisaged that the relevant insolation data for the Wilmington area was collected, and used in the design of the system, with the above factors taken into account.

The design of the installation is shown in Figure 6, including a list of abbreviations.

LIST OF ABBREVIATIONS.

FCR - FLASHING CHECK RELAY.

DNXSR - DOWN DIRECTION CROSSING STICK RELAY.

UPXST - UP DIRECTION CROSSING STICK RELAY.

ATR - "A" TRACK RELAY.

BTR - "B" TRACK RELAY.

CTR - "C" TRACK RELAY.

RXE - DANGER OR RED CROSSING LIGHTS.

BIBLIOGRAPHY.

GOULDING D.L. "SOLAR POWER BATTERY CHARGING"
I MECH E SEPT/OCT 1976

TIDELAND SOLAR ELECTRIC GENERATION

LUCAS INDUSTRIES AUSTRALIA LIMITED

WESTINGHOUSE BRAKE AND SIGNAL

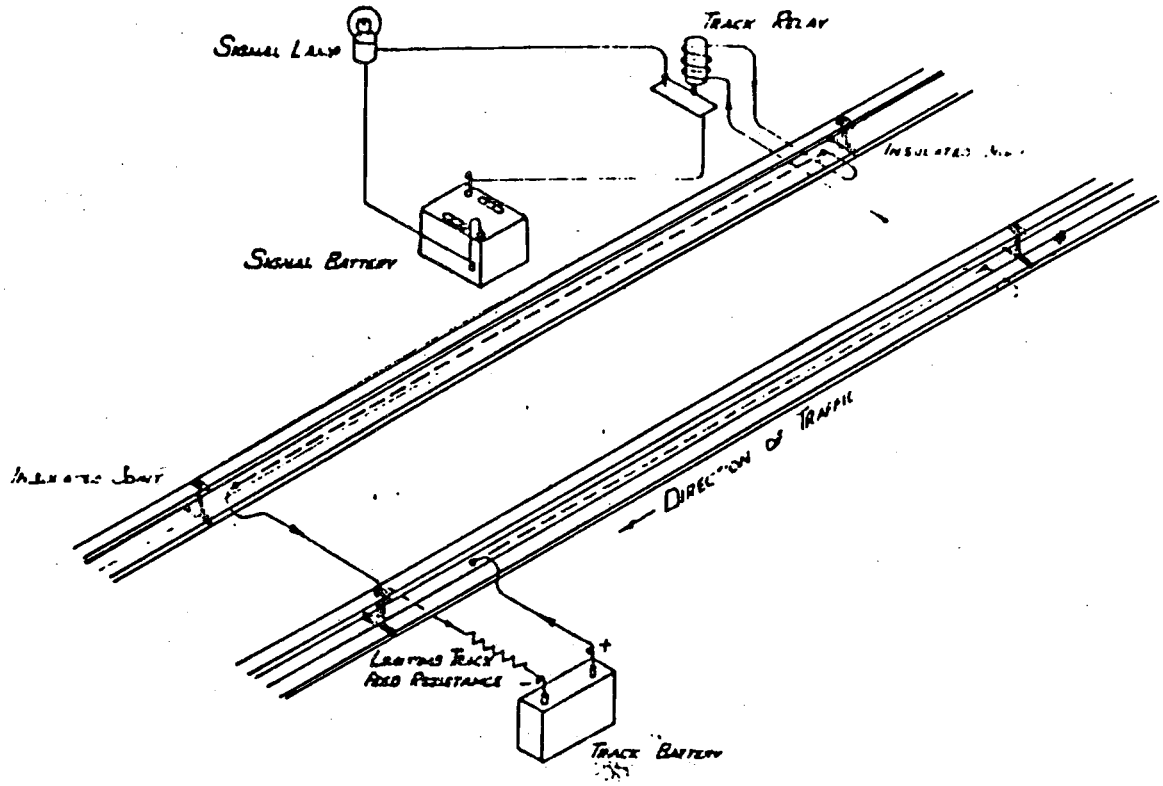

(A) Track Circuit Unoccupied

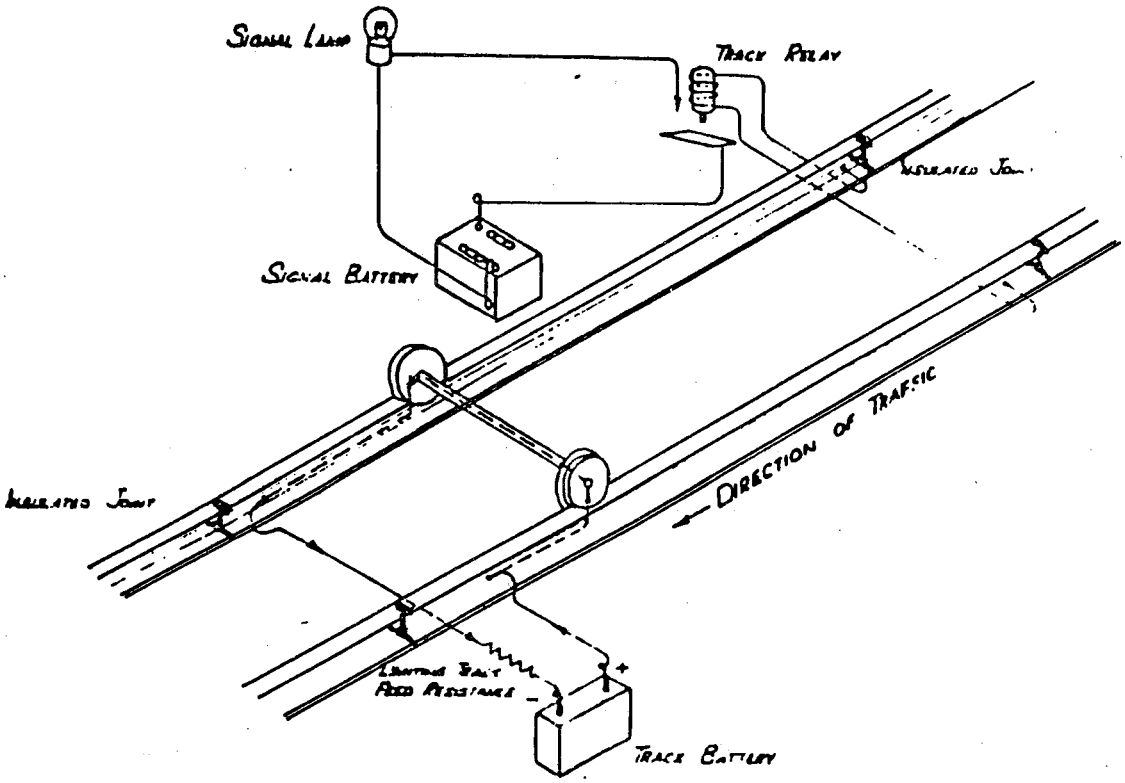

(B) Track Circuit Occupied

FIGURE 1.

57/445

HD-BO DL4B/DL5BT LOC

TWIN SOLAR MODULE
TIDELAND TYPE
GG-104127/104127/2

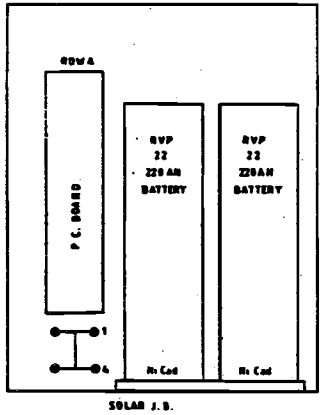

ROW A

CORE	INTER CONNECT	FUSE / TERM	FUNCTION	CORE	
		1	DL4B TB		B.T.S. TO TRACK
		2	DL4B TN		
		3	DL5B TB		B.T.S. TO TRACK
		4	DL5B TN		

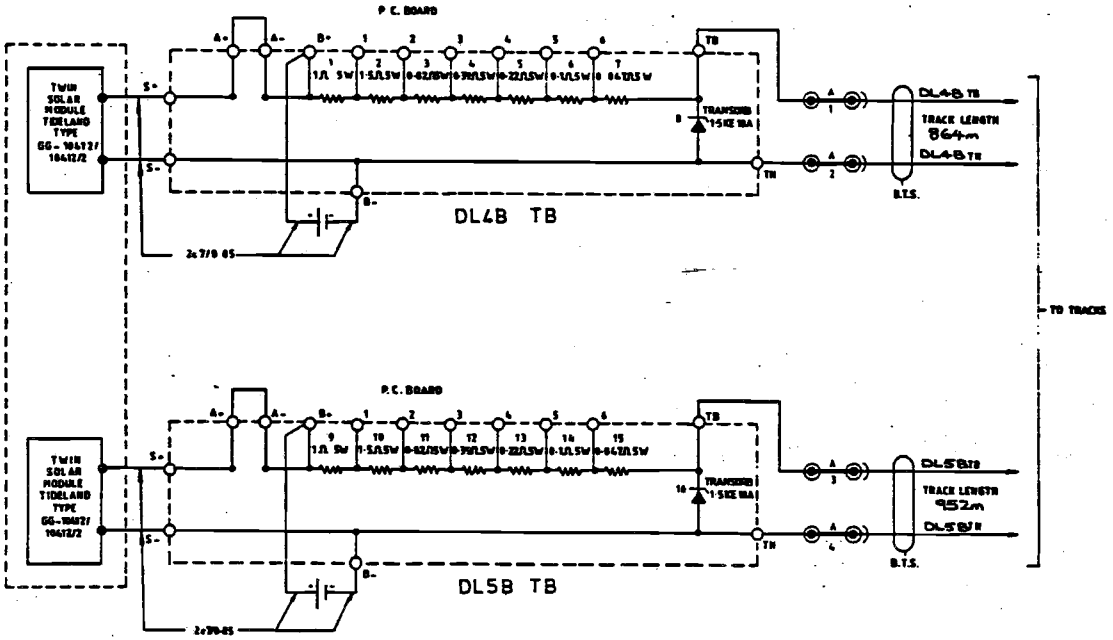

HD-BO DL4B/DL5BT LOC

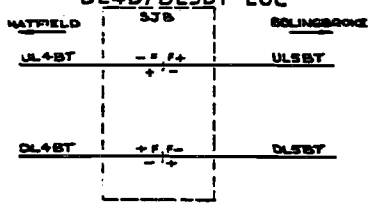

FIGURE 2.

CHECKED
REVISION NUMBER
DRAWN B.D.S. 21/5/84
APPROVED P.T.F.

WESTINGHOUSE BRAKE & SIGNAL COMPANY LTD.

SCALE
DRAWN
TRACED

RECOMMENDED D.G. WHISSON SIGNAL ENGINEER
DATE PER

QUEENSLAND RAILWAYS CHIEF SIGNAL & TELECOMMUNICATION ENGINEER'S BRA

HATFIELD – BOLINGBROKE

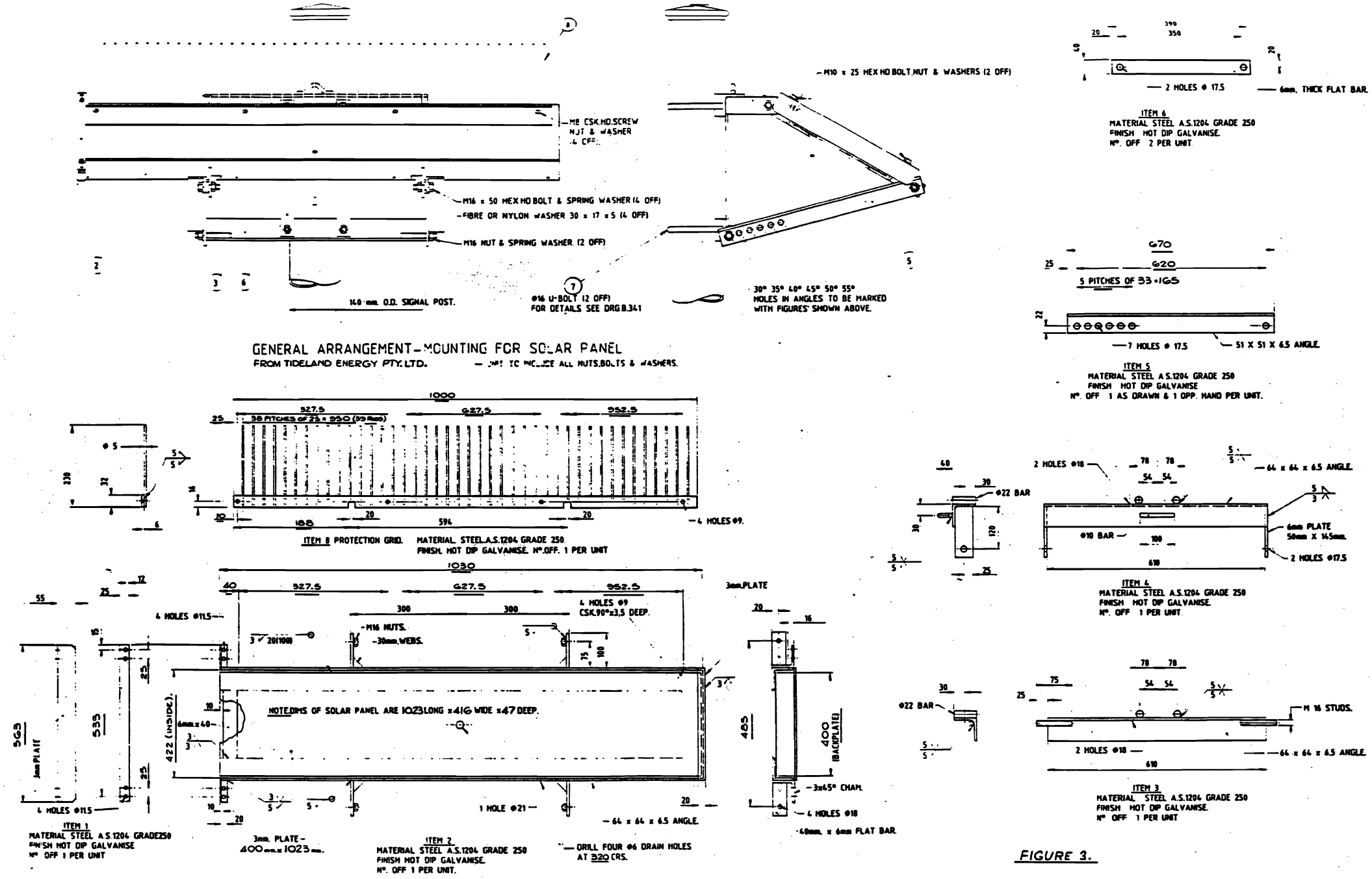

FIGURE 3.

SCALE. 1:5

CALCS.			
CHECKED.			
DRAWN.	I.H.	5.1.84	
CHECKED.	J.A.	6.1.84	
PASSED.			
SUBMITTED			

ALTERATIONS.

RECOMMENDED.

APPROVED.

QUEENSLAND RAILWAYS.

CHIEF SIGNAL & TELECOMMUNICATIONS ENGINEER'S BRANCH

MOUNTING FRAME FOR SOLAR PANEL.
TIDELAND GG 3241/12.

GENERAL ARRANGEMENT AND DETAILS.

DRAWING NUMBER. C.1020

ISSUE.

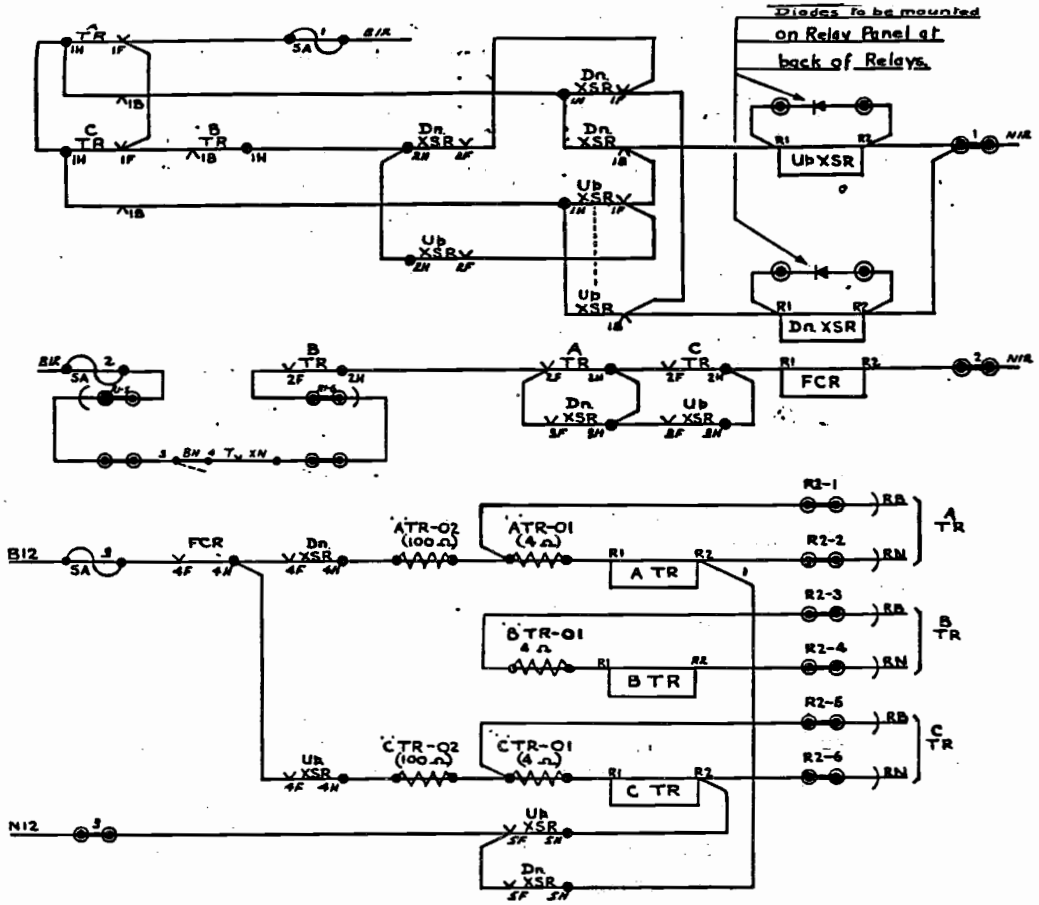

FOR POWER SUPPLIES REFER DSE 59 SH2.

FIGURE 6. - PART A

Letter	Alteration	Init. Date	C'kd Date	Sub-mitted	Passed	Sr. T.E.	Install	Orig Corr.	C'kd Date
C	INSTALL OF SOLAR PANEL, REMOVAL OF TEST BOX							G.M.S. 11-7-83	R.J.A. 15.3.80
B	INSTN. OF 1 TEST BOX							B.L.L. 10-6-79	E.M.G. 21.12.71
A	50V. RELAYS CHANGED TO 12V. RELAYS	S.B.N. 26-6-70	E.M.G. 28.7.70	B.C.N. 29-10-70	L.C.J. 29.10.70	L.C.J. 29.10.70			

QUEENSLAND RAILWAYS
CHIEF ENGINEER'S BRANCH

WILMINGTON
BRUCE HWY. FLASHING LIGHTS.
Wiring Diagram.

Drawn	P.J.A.	1-7-70
Traced		
Checked	E.M.G.	27.7.70
Submitted	L.C.J.	29.7.70
Passed	D.E.E.	31.7.70

H.E. Jones
Sig. & Tele. Engineer.
Date: 3-8-70

DE-1819 Sh. 1 of 1

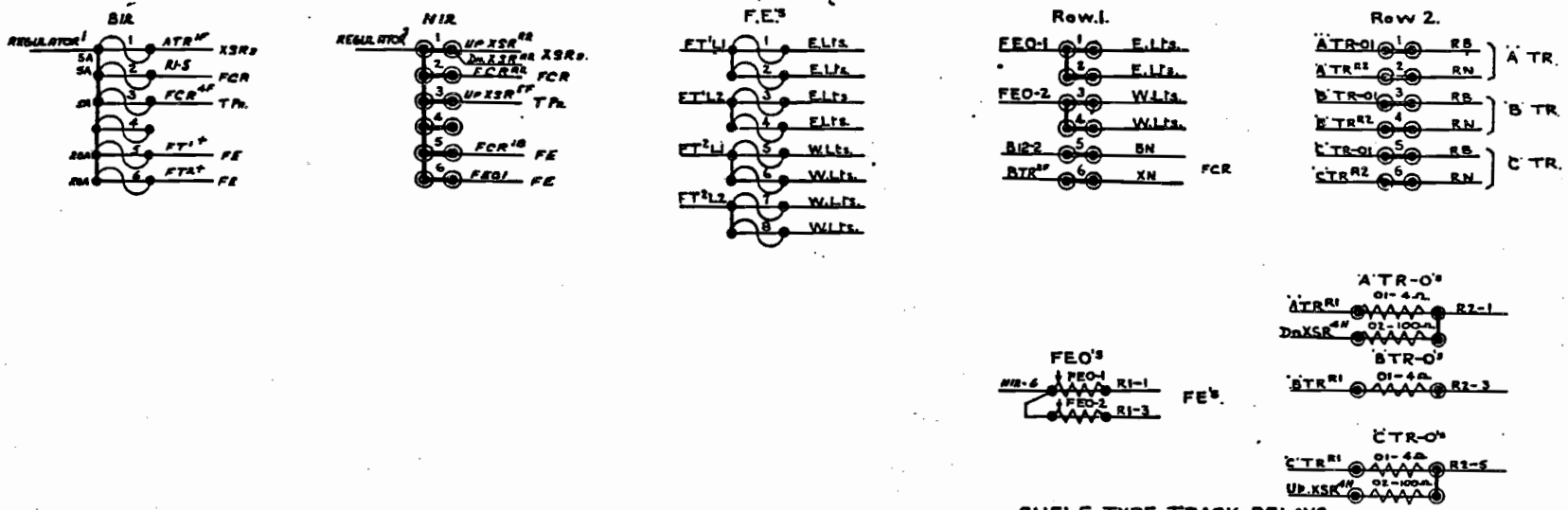

SHELF TYPE TRACK RELAYS.
4F/4B.

RELAY	1	2	3	4
A TR	XSR's	FCR		
B TR	XSR's	FCR		
C TR	XSR's	FCR		

SHELF TYPE LINE RELAYS 1000Ω.

RELAY	1	2	3	4	5	6
UP XSR	STICK	UP XSR	FCR	CTR	CTR	
DN XSR	STICK	DN XSR	FCR	ATR	ATR	
FCR	FT¹	FT²		ATR CTR	X	X

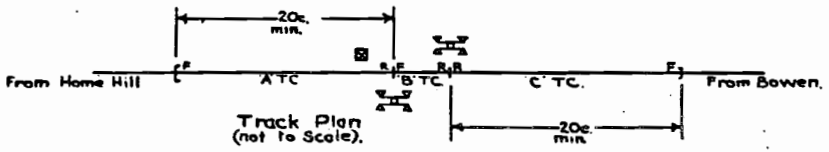

Track Plan
(not to Scale).

FIGURE 6 - PART B

FOR POWER SUPPLIES SEE DSE.59 SHE.

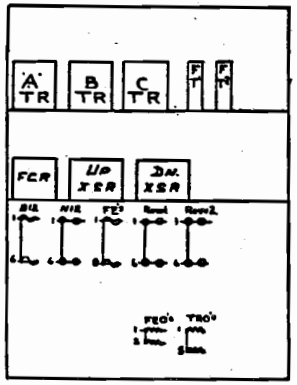

Box Layout.

Letter	Alteration	Init. Date	Ck'd Date	Submitted	Passed	S.A. T.E.	Install	Orig. Corr.	Ck'd Date
C	INSTALLATION OF SOLAR PANEL, NO TEST BOX								P.J.A. 14-2-83
B	INSTN. OF TEST BOX								
A	50V. RELAYS CHANGED TO 12V RELAYS.								

QUEENSLAND RAILWAYS
CHIEF ENGINEER'S BRANCH

WILMINGTON
BRUCE HWY. FLASHING LIGHTS
Terminal Board, Contacts Used, Box Layout

Drawn	P.J.A.	2-7-70
Traced		
Checked	E.M'G	27.7.70
Submitted		
Passed		

Sig. & Tele. Engineer
Date: 3-8-70

DE-1819

Sh 2

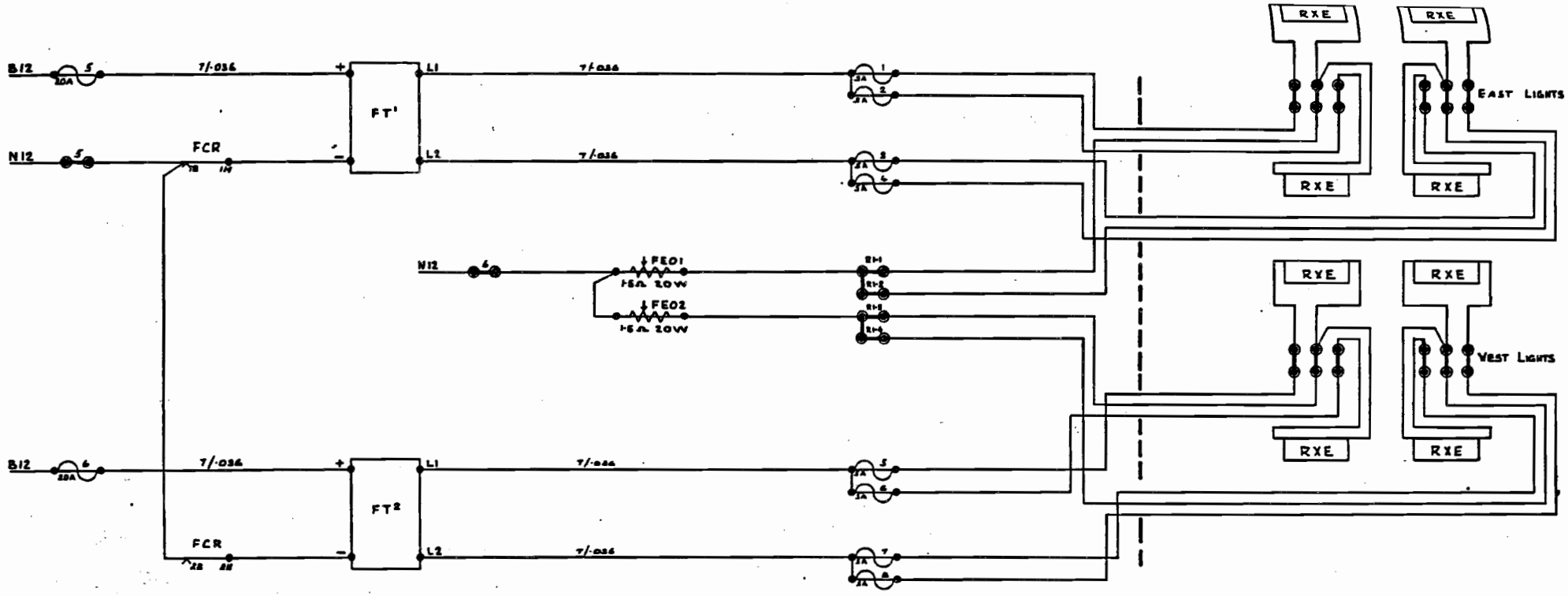

FIGURE 6 - PART C

A	50V. RELAYS CHANGED TO 12V. RELAYS.	S.E.H. 26-10-70	E.M.G. 12-11-70	E.C.N. 29-10-70	L.C.W. 29-10-70					
LETTER	ALTERATION	INIT DATE	CK'D DATE	SUB-MTD	PASS	S&T ENG	INST DATE	ORIG CORR	CK'D DATE	

QUEENSLAND RAILWAYS
CHIEF ENGINEER'S BRANCH.

WILMINGTON

FLASHING LIGHTS WIRING DIAGRAM

DRAWN.	L.J.C.	2-7-70
TRACED.		
CHECKED.	E.M'G	27.7.70
SUBMITTED.	L.C.W.	28-7-70
PASSED.	O.E.E.	31-7-70

SIG & TEL ENGINEER: H. C. Jones 3-8-70

DATE:

DE-1819 SH 3

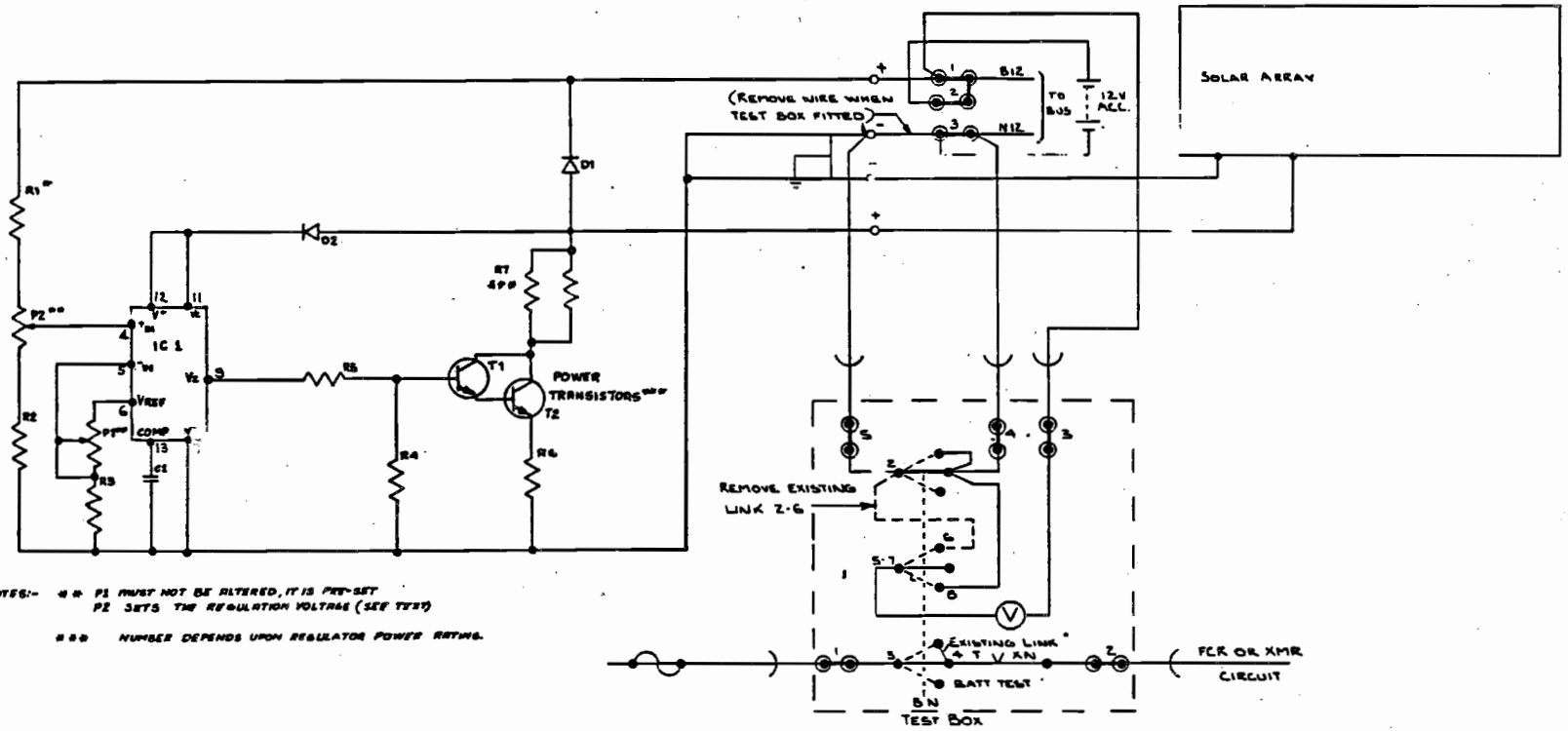

NOTES:- ** P1 MUST NOT BE ALTERED, IT IS PRE-SET
P2 SETS THE REGULATION VOLTAGE (SEE TEST)

*** NUMBER DEPENDS UPON REGULATOR POWER RATING.

ITEM

R1*	6.8 KΩ	FOR 12V SYSTEM
	22 KΩ	FOR 24V SYSTEM
R2	6.8 KΩ	
R3	6.8 KΩ	
R4	4.7 KΩ	2.5 AMPS
	2.7 KΩ	7 AMPS
	2.2 KΩ	15.5 AMPS
R5	470 Ω	2.5 AMPS
	220 Ω	7 AMPS
	100 Ω	15.5 AMPS
R6	0.27 Ω	
R7	POWER DEPENDENT	LOW, HIGH POWER
D1	BYX42	1200R
D2	IN4004	
IC1	LM 723	
P1	500	LOW TEMP. COEFFICIENT
P2	1 KΩ	LOW TEMP COEFFICIENT
C1	4.7 μF	
T1	BD 437	MOUNTED ON HEATSINK.
T2	2N 3055	MOUNTED ON HEATSINK.

MODEL BVR-12-2.5.
LUCUS INDUSTRIES AUST. LTD.
BVR SERIES CHARGE REG.

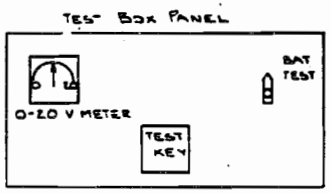

BN IS A BLUE LINE C20 - AZR46AX
S1C - T412
S1B - G502
S1B - F550 P1

NOTE
SOLAR ARRAYS SHOWN ABOVE ARE SOLAR POWER CORPORATION SERIES 1003 MODEL 812-361 6T.

FIGURE 6 - PART D

SPECIFICATION SHEET FOR SOLAR POWER CORPORATION BATTERY VOLTAGE REGULATOR MODEL BVR-12-2.5

	MINIMUM	TYPICAL	MAXIMUM	UNITS
REGULATING VOLTAGE RANGE	12		15	VOLTS
CURRENT RANGE	0		2.0	AMPS
REGULATION: 0 TO 2 AMPS AT REGULATING VOLTAGE AND CONSTANT TEMPERATURE		0.1	0.2	VOLTS
TEMPERATURE COEFFICIENT OF REGULATING VOLTAGE		-0.2		%/°C
VOLTAGE DROP ACROSS REGULATOR (INCLUDES BLOCKING DIODE DROP)		0.3	0.38	VOLTS
STANDBY CURRENT DRAIN FROM BATTERY		1.5	4.0	mA
OPERATING TEMPERATURE RANGE	-40		+60	°C

ENVIRONMENTAL ALL COMPONENTS CONFORMALLY COATED WITH HUMIDITY SEALANT. REGULATOR SHOULD BE PROTECTED FROM DIRECT EXPOSURE TO THE ELEMENTS. AIR FLOW [illegible] SHOULD BE UNIMPEDED.

VOLTAGE ADJUSTMENTS. SCREW DRIVER POTENTIOMETER ACCESSIBLE WHEN REGULATOR COVER IS REMOVED. LESSENS CHANCE OF REGULATING VOLTAGE BEING INADVERTANTLY CHANGED

OVERALL NOMINAL DIMENSIONS. 3⅛" x 5½" x 7¼"

NORMAL SHIPPING WEIGHT 3 lbs.

B	NEW VOLTAGE REGULATION CIRCUIT				
A	ADDITION OF TEST BOX				

SCALE
DRAWN
TRACED
CHECKED
PASSED

RECOMMENDED — SIG & COM ENGINEER — DATE
APPROVED — CHIEF ENGINEER

QUEENSLAND RAILWAYS — CHIEF ENGINEER'S BRANCH

SOLAR CELLS

BATTERY VOLTAGE REGULATOR

DSE-59

SHEET NUMBER 2

MECHANICAL DETAILS

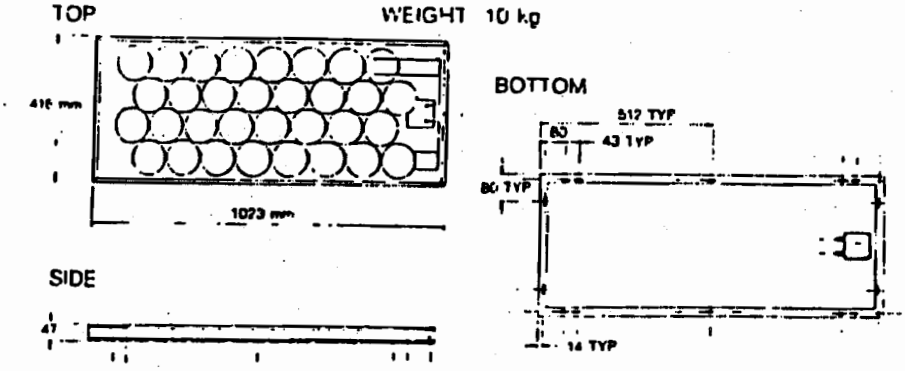

TERMINAL BLOCK
CURRENT RATING — 35 Amps

CABLE GLAND WILL
ACCOMMODATE ROUND CABLES
FROM 4mm O D to 10mm O D

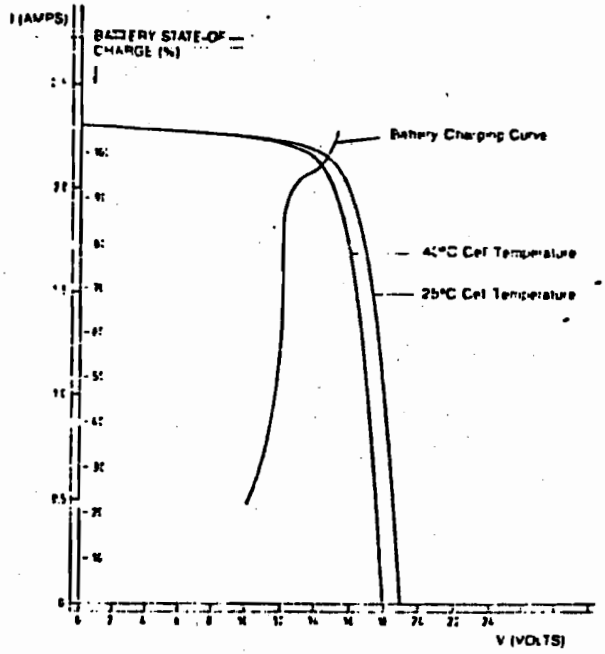

I-V Curve of GG-3241/12 Self Regulation Solar Module.

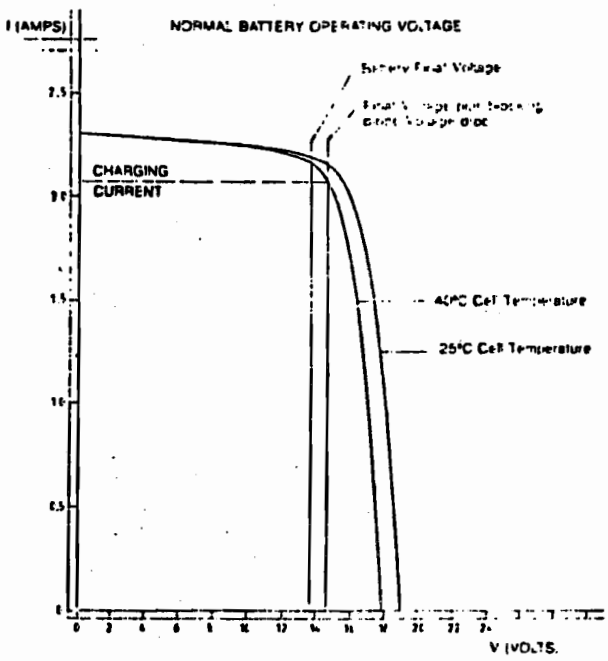

GG-3241/12 Solar Module I-V Curves

ELECTRICAL CHARACTERISTICS

PEAK POWER (Pp) Pp ± 10%	WATTS @ 25°C	32.0
VOLTAGE @ Pp Vpp ± 6%	VOLTS @ 25°C	15.5
CURRENT @ Pp Ipp ± 10%	AMPS @ 25°C	2.06
SHORT CIRCUIT CURRENT Isc ± 10%	AMPS @ 25°C	2.30

OPEN CIRCUIT VOLTAGE Voc ± 3%	VOLTS @ 25°C	18.8
NOMINAL CURRENT @ 14V ± 10%	AMPS @ 25°C	2.20
NOMINAL CURRENT @ 14V ± 10%	AMPS @ 40°C	2.13

Specifications above are to ± 10% electrical output. Figures are taken under standard conditions of 100 mW/cm² light intensity (AM 1.5) at 25°C cell temperature.

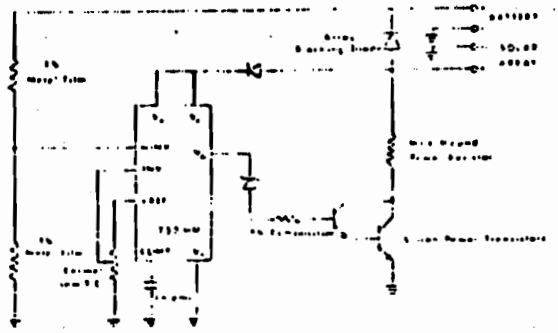

FIGURE 4.

FIGURE 5. Basic Voltage Regulator Circuit

COMMONWEALTH GOVERNMENT'S APPROACH TO SUPPORTING ENERGY RESERACH

Dr N F Teede

Member Technical Standing Committee

Department of Resources and Energy, Canberra

Commonwealth Government Approach to Supporting Energy Research and Development

The Commonwealth Government's energy policy has been formulated with a number of basic aims which include:

- ensuring that an adequate supply of energy is available at all times
- preparing Australia for major interruptions to oil supplies through stocks, emergency-allocation schemes and other short-lead-time measures
- achieving the optimum economic level of liquid fuel self-sufficiency
- facilitating the efficient use of energy in Australia and the efficient development of Australia's energy resources in response to the needs of domestic and overseas energy markets.

Support for energy R&D represents but one of a number of tools for implementing the Commonwealth Government's energy policy objectives. Other measures include pricing, taxation policies and information dissemination. Generally speaking, direct Government funding for energy RD&D can be justified only when the private sector receives insufficient commercial incentive to undertake such work, and the Government considers that continued selective support of energy RD&D is warranted in the light of national energy objectives and priorities. Given the changed outlook for world oil prices, current perceptions of future self-sufficiency from conventional sources and increased conservation resulting from new technology and past price rises, Australia has the opportunity to reassess the development of alternatives to meet energy policy goals. In spite of this relaxation in the time scale, the long lead times from the laboratory stage to commercialisation and in training of people indicate a need for the continuity in the national energy RD&D effort.

The majority of Commonwealth Government expenditure on renewable energy R&D arises from the internal allocation of resources within large research establishments such as the CSIRO, universities and colleges of advanced education. The Commonwealth Government's major avenue for providing direct support for energy R&D is the National Energy Research, Development and Demonstration (NERD&D) Program, which is administered by the Department of Resources and Energy. Program funds are superimposed on the existing level of activity to bring the overall Australian energy research, development and demonstration effort into line with energy policy.

Advertisements calling for applications for NERD&D Program grants typically appear in the national press in March each year. Applications are assessed by the National Energy Research, Development and Demonstration Council (NERDDC) and its Technical Standing Committees (TSCs) before recommendations are made to the Minister for Resources and Energy in September.

The Program is now in its eighth year having been established in 1978 in response to the oil crisis. As the Program has evolved it has become increasingly common for NERDDC to recommend that commissioned studies and workshops be undertaken to identify the most appropriate directions for providing support. As well, the Department of Resources and Energy is undertaking internal reviews into various energy technologies which are also serving to aid the evaluation process.

Since the Program's inception approximately $128 million has been committed to research projects. Of this some $21 million has been directed to research involving renewable energy technologies.

However funding levels are not necessarily a realistic measure of the support for a particular energy technology. Renewable energy technologies are frequently in the research and development phase where significant results can be achieved with modest amounts of money. In contrast many coal projects involve advances to existing process technology where major demonstrations are required. A perhaps more appropriate indicator is the percentage of total projects supported. In the past three years renewable energy projects have accounted for 25% of the total number receiving support.

The commercial prospects for many new renewable energy technologies in areas with access to cheap conventional energy resources (coal, natural gas) are poor in the short to medium term. However low temperature applications of solar energy such as domestic water heating and passive solar household design are already proving economically viable in areas with access to grid electricity. This is evidenced by the 5% of Australian households (250 000) that now have a domestic solar water heating system installed.

NERD&D Program support to S.W. Hart & Co. assisted the development of an advanced flat plate collector, the Solahart JK, which is now being commercialised. Support is also being provided to Rheem Australia to develop and evaluate a domestic water heating system using evacuated tube collectors developed by the University of Sydney.

The best prospect for implementing many new renewable energy technologies in the near future is likely to be in areas of Australia remote from the major electricity grids. Telecom Australia have already installed in excess of 200kW of photovoltaic modules spread throughout a network of small telecommunication repeater stations. Water pumping is another market for photovoltaics which is likely to expand rapidly within the next few years. NERD&D Program support aims to extend the scope for solar systems by funding the development and demonstration of equipment to help meet the electricity requirements of remote homesteads and communities. This has involved not only support for solar components but also for balance of systems components such as batteries and inverters.

With Program support Dr Martin Green, from the University of NSW, has developed a silicon photovoltaic cell with the highest energy conversion efficiency yet to be achieved worldwide for a silicon cell. This represents an excellent technical achievement. But from the NERD&D Program's perspective it will only be truly successful if this innovative work can be commercialised. In this instance it is encouraging to note that the Australian photovoltaic manufacturer, BP Solar Australia, has close links with Dr Green's research group and is currently evaluating the prospects for commercialising these developments.

A study will shortly be commissioned under the Program to assess the market for power supply systems in remote areas of Australia. The study will aim to establish both the size of the market and the electricity usage pattern of these systems. The study should provide valuable information for designers of stand-alone power supply systems incorporating such renewable energy components as photovoltaic modules and wind turbines.

This study represents but one of a number of measures implemented through the NERD&D Program to assess the prospects for various renewable energy technologies. These have included:

- a commission study and workshop into solar ponds

- commissioned studies into solar thermal electric systems and solar industrial process heat

- a review into ethanol production.

It is also anticipated that within the next few months a wind energy workshop will be held and reviews into photovoltaics and wind energy will become publicly available. The issues raised through this review process should significantly aid NERDDC in its future deliberations.

RESIDENTIAL RENEWABLE ENERGY TECHNOLOGY

A Survey of Installed Systems in South East Queensland and Northern New South Wales

Mr T D Berrill and Mr P Fries

Renewable Energy Services

RESIDENTIAL RENEWABLE ENERGY TECHNOLOGY - A SURVEY OF INSTALLED SYSTEMS IN SOUTH EAST QUEENSLAND AND NORTHERN NEW SOUTH WALES

Trevor D. Berrill and Peter O. Fries

Renewable Energy Services
P.O. Box 33,
St. Lucia, Qld. 4067
Australia

ABSTRACT

Recent advances in the technologies of Photovoltaics (PV), Wind Energy Conversion Systems (WECS) and Micro Hydro Systems (MHS) has enabled some people to live independently of the centralized electricity grids without a significant impact on lifestyle. In order to determine how effective the technologies are and the different ways that they are being used to generate electricity, a comprehensive survey was conducted to evaluate residential renewable energy technology in Southeastern Queensland and Northern New South Wales and the attitudes of various groups using these technologies. The results of this research are presented in the following paper.

KEYWORDS

Renewable energy, alternative energy, residential energy.

INTRODUCTION

In the past, people who chose not to connect to the electricity grid systems were considered to be either unfortunate or a little eccentric. Their electricity needs were generally provided by petrol or diesel generators, sometimes by wind and hydro-generators, or else they simply did without. Often a variety of energy sources would be harnessed to provide their energy requirements. For example, petrol, diesel, wind or hydro-generation may be used for electricity, and gas, kerosene or wood energy for cooking, space heating, and water heating. These systems were often examples of what Amory Lovins (see note below) has called good matching of primary energy to "end-use" task.

The use of renewable energy technologies has been a classic case of "re-inventing the wheel", since the use of solar, wind and water energy has been with us for centuries. The "energy conversion" crisis of the 1970's spurred the development of these technologies.

Recent advances in photovoltaics (PV), wind energy systems (WECS), micro-hydro

systems (MHS) and electronic inverters and control equipment has resulted in these systems being often more reliable and less costly than their fossil fuelled counterparts and certainly a lot cleaner and quieter. This has enabled people in "remote" areas to sustain a "comfortable" lifestyle independent of the electricity grid, without enduring the hardships of their predecessors.

Today's renewable energy systems are basically composed of 5 components that include the generating, storage, power conditioning, load and back-up systems. These are illustrated in the following diagram.

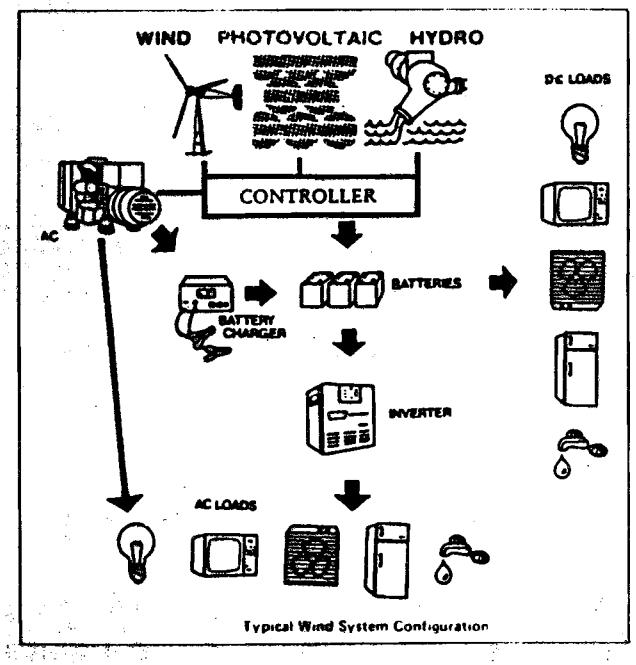

Typical Wind System Configuration

RATIONALE

We have been involved since 1981 with the design, installation and engineering of a variety of renewable energy systems. However, it has recently become obvious that a comprehensive survey of renewable energy systems was needed to evaluate the success of recent technological innovations and to provide a basis of experience for those wishing to "follow in the footsteps" of the earlier energy pioneers. A questionnaire was prepared that would provide information on the type of systems used, a profile of electrical usage and the attitudes of users to their systems, lifestyle and the utility.

METHODOLOGY

The results that follow are based on a written survey developed by Renewable Energy Services with assistance from Ms. Rosemary Hawker, Ms. Mary Barram, and Mr. Steve Bushby. A sample of 30 systems was chosen based on previous knowledge and recommendations of businesses specializing in renewable energy equipment. The sample area was bounded on the north by Gympie (in Queensland) on the south by Lismore (New South Wales) and on the east by Toowoomba.

Due to the detailed nature of the survey and the necessity to obtain explicit technical information, the questionnaires were completed by personal interview where possible and by correspondence otherwise. In addition to the questionnaire interviewees were encouraged to freely remark on any questions of the

of the survey and these responses were also recorded. A total of 20 questionnaires were completed by interview and 4 completed by post. The raw data from the survey was analysed to provide the following statistics: (See Table 1)

- % breakdown of technology used (PV, WECS, MHS)
- average and range of the renewable energy load
- average and range of costs
- average and range of persons per household system
- average and range of renewable fraction
- % breakdown of systems with inverters and solar hot water systems
- average and range of system peak power output

TABLE 1. Table of System Data

No.	Type	Years In Use	Cost ($)	No. Persons	Inverter (Yes/No)	DHW (Yes/No)	Renewable Avg. Load (Wh/day)	Renewable Fraction (%)
1	4-PV Tracking 1-200w WECS	3.0	6030	2	yes	yes	1484	100
2	4-PV Fixed	.6	7665	2	yes	yes	347	87
3	1-1000w WECS	2.2	3950	1	no	no	341	66
4	1-750w WECS	1.0	3840	4	no	yes	229	31
5	1-450w WECS	1.5	4337	5	yes	yes	405	10
6	1-2kw WECS	2.2	4750	4	yes	yes	1851	64
7	1-1kw WECS	1.4	5700	4	yes	yes	1061	89
8	1-1kw WECS 4-PV Tracking 4-PV Fixed	.7	11160	2	yes	yes	1791	100
9	6-PV Fixed	.7	6486	2	yes	yes	1389	99
10	4-PV Fixed	.7	4850	4	no	yes	668	74
11	10-PV Fixed	.3	6570	7	yes	yes	2033	90
12	5-PV Fixed	2.6	5272	2	yes	yes	200	48
13	2-400w MHS	9.0	4200	25 (10 homes)	no	yes	718/home	100
14	7-PV Fixed 1-1kw WECS	4.0	3565	8 (4 homes)	no	yes	825/home	99
15	1-1kw WECS	1.6	2100	2	yes	no	1415	*
16	1-250w MHS	1.0	2400	4	no	yes	2190	100
17	1-60w MHS	.4	1210	1	no	yes	455	100
18	1-110w MHS	4.0	3000	4	yes	yes	1470	100
19	6-PV Fixed 1-200w WECS	4.0	4280	4	yes	yes	1647	100
20	6-PV Fixed	3.0	9650	2	yes	yes	525	99
21	8-PV Tracking	6.5	3620	2	yes	yes	460	57
22	4-PV Fixed	1.0	1930	2	yes	yes	250	93
23	1-350w MHS	2.0	3650	30 (15 homes)	no	yes	400/home	100
24	8-PV Fixed	4.5	6420	4	no	yes	519	34
AVERAGES		2.5	4861	2.54	32 % yes	96 % yes	832	80

In addition, a breakdown to responses on attitudes was also tabulated (see Table 2).

CONCLUSIONS

System Performance: It was clear from the survey and questionnaire that the majority of people interviewed were satisfied with their renewable energy systems. Of those responding, 72% indicated that their systems were performing as well or better than they expected. Most of the systems that were not performing satisfactorily were designed and installed by one company in Caloundra that seemed more concerned with sales than with proper system design.

Although the operating experience of these systems in Australia is still relatively young (less than 3 years on average), advances in system components have proceeded at an accelerated rate. Most users perceived a high degree of reliability in their systems while at the same time noting that their systems required more effort to maintain than a conventional grid-connected electrical

system. This increased maintenance effort appears to be the result of a greater degree of responsibility towards their own energy use.

System Types: A breakdown of system types is as follows:

PV	-	9	(38%)	MHS	-	4	(16%)
WECS	-	6	(25%)	Hybrid	-	5	(21%)

The results clearly demonstrated that WECS and MHS are suited to site specific areas, i.e. higher wind speed and rainfall areas. PV systems siting was more flexible, though substantially less effective in areas where MHS and WECS were more suited.

It was also evident that each area provided its own renewable energy resources and that careful matching of resource and conversion technology was necessary to gain maximum energy production.

System Loads and costs: The average renewable electrical load was 0.83kWh/day/home and ranged from 0.2kWh/day/home to 2.2kWh/day/home and represented an average renewable energy fraction (REF) of 80% of total electrical load per system. A large majority of homes (96%) used renewable energy domestic hot water systems (REDHWS) supplied by biomass (wood stoves), solar thermal technology, or a hybrid of the two. The reduction of the electricity use represents a strong contrast to the electrical energy consumption in the "all electric home" of 20-30kWh/day. We have concluded that this reduction is primarily due to proper end-use matching of energy source to task and to energy conservation measures. Costs for the systems varied widely from approximately $1,200 to $11,000 with an average cost of $4,800. By far the most cost effective of these systems were Micro Hydro Systems (MHS) which produced electricity for less than $1 per watt installed. One calculation showed the 10 year levelized cost at 15¢ per kilowatt-hour. The average cost was $2.80 per watt installed. In most cases the systems were installed at a lower cost than the connection cost (inc. guarantee) to a utility grid system.

Cost Comparison of Different Systems: A simple cost comparison method was used to compare PV and MHS over a 10 year period. The method compares capital cost, and energy production with a maintenance factor of 2% to determine the annual electricity cost.

System Description: Example 1 - 10-37 Watt PV modules, installed cost of $6,570 usable system energy production of 1.2 kWh/day or 4,380kWh/10 years. Cost per kWh: $1.80. Example 2 - 400 Watt MHS installed cost $4,200 usable system energy production of 7.7kWh/day or 28,032kWh/10 years. Cost per kWh: $0.18. Further reference to cost comparison is provided by Robins and Williams in a 1983 Energy Authority of NSW Report entitled "Comparison of Rural Domestic Electricity Grid Connection Costs with Alternative Power Generation Systems". Some interesting costs from their report are as follows:

System Type	Annual Elec. Cost	Life Gen. Cost
Diesel	$0.85/kWh	$0.75/kWh (1983$)
PV	$2.32/kWh	$0.67/kWh (1983$)
WECS	$0.41/kWh	$0.30/kWh (1983$)

System Problems: The advent of modern electronics has had three major effects on renewable energy technology. These effects are: 1. better monitoring and protection of battery storage systems; 2. reduced energy consumption of some appliances; 3. the development of highly efficient solid state inverters. Electronic equipment was used in 92% of systems to monitor or modify the power input and/or output. Reliability of solid state inverters and converters was a common problem with 40% of the systems with inverters experiencing problems that led to the eventual destruction of the solid state device.

These problems resulted from: 1. lack of information supplied by the manufacturer; 2. poor design, particularly in circuit protection; and 3. electronic component failure. Storage batteries also presented major problems to 21% of the systems. These problems resulted from poor design (cracked cases in one brand and destruction from lightning) and poor user education. Many users lacked sufficient details on the operating and maintenance of their batteries. Lack of back-up generating capacity for battery charging also contributed to short battery life. In conclusion there is a great demand for batteries that have good cycling ability (at least 1500 cycles), sufficient electrolyte reserve and proper operating documentation. The lack of a comprehensive wind energy survey for each of the WECS included in this study had two major effects: (1) some mechanical failures of WECS due to high turbulence; and (2) poor siting with consequently lower energy output. The need for proper site surveys with all renewable energy systems is clearly demonstrated.

User Attitudes: One interesting area of the survey focused on user attitudes towards their systems. One particular aspect of living with a renewable energy system that we wanted to evaluate was the perception of lifestyle change due to the use of their systems. Our results were interesting and encouraging. A majority of respondents (76%) experienced a positive change in lifestyle as a result of using renewable energy systems to provide part or all of their domestic electrical energy needs. It is interesting to note that 74% of these people who experienced a positive change were using more appliances in their previous homes. This appears to be in direct contradiction to the consumer and utility ethic that more appliances equates to a better lifestyle. A substantial number of users (72%) indicated that visitors to their homes had difficulty believing that the systems could provide electrical power. This indicates a lack of available information to the public on renewable technologies. Not surprisingly, 100% of the respondents felt that more money should be spent on renewable energy research and information dissemination of the results of that research. It is hoped that this study will stimulate interest in the field of renewable energy technology at the federal, state and local level to promote these environmentally sound alternatives to fossil fuel derived electricity. It is also hoped that this study will be expanded to include systems in other parts of Australia and form a broad base of experience for those wishing to explore the possibilities of renewable energy technology.

TABLE 2. Attitudes

Responses to the following questions were tabulated with the results indicated next to the response. The number in brackets indicates the total number of responses for that question.

1. In my previous dwelling I had - A.more (63%); B.less (25%); C.same (12%), number of appliances (24).
2. Did you seek information or cost estimates from the local utility? (23) - A.yes (65%); B.no (35%)
3. If your answer to No.2 was "yes", how would you rate the utility's interest in renewable energy systems? (13). A.very interested (7%); B.moderately interested (7%); C.not interested (46%), strongly opposed to renewable energy (40%).
4. What was the most important reason why you chose a renewable energy system (24). A.cost (25%); B.energy independance (42%); C.reduced fossil fuel demand in society (13%); D.other (specify) (20%).
5. How would you describe the degree of change, if any, in your lifestyle due to your renewable energy system (25). A. no change (4%); B.minor change (36%); C.major change (60%)
6. If you experienced a change in No. 5 was it: (24) A. for the better (76%); B.for the worse (8%); C.neither better nor worse (16%).

For the following questions, circle the letter that best describes your answer:
A. agree a lot. B. agree a little. C. disagree a little. D. disagree a lot.

7. The reaction of visitors to my house with regards my renewable energy system has been favourable. (25). A. (84%). B. (12%). C. (4%). D. (0%).
8. First time visitors to my house did not think a home could be powered by a renewable energy system. (25). A. (48%). B. (24%). C. (24%) D. (4%).
9. My renewable energy system is performing as well or better than I expected. (26). A. (50%). B. (27%). C. (15%) D. (8%).
10. Do you think the State and Federal Governments should spend more money on renewable energy research? (22) Yes (100%) No (0%).

COMMERCIALISING ALTERNATIVE ENERGY SYSTEMS

Dr R Sampson

Queensland Innovation Centre Ltd, Brisbane

COMMERCIALISING ALTERNATIVE ENERGY SYSTEMS

ABSTRACT

Development and utilization of alternative energy systems (AES) based on renewable resources may be undertaken for national strategic reasons. Such efforts may therefore be subsidized by governments seeking to achieve energy independence or balance of payments objectives. However, in today's world of declining oil prices, commercialising AES must generally proceed on the basis of commercial merit, not governmental support.

Commercialisation of renewable resource energy systems must therefore involve the same fundamental considerations and steps as commercialisation of new products in other areas. In any market arena (except possibly those of pure novelties), new products must meet fundamental customer needs in ways which offer advantages over the competitive products the customer now uses (or can choose to use). If the new products do not do so, they will fail commercially. As obvious as that point sounds, many attempts at new product commercialisations have failed because they did not adequately address customer needs, and AES products worldwide have been no exception.

In assessing the reason-for-being of any given AES, it might be helpful to think of the system in product terms. Under this viewpoint, AES are intermediate products which provide the means to deliver the end-products of electricity, heat, light, or stored energy in the form of an altered fuel. It is these end-products that the customer actually needs. The potential advantages that AES might offer customers generally fall into lower cost, environmental, safety, convenience and reliability areas. AES are capable of providing advantages relative to conventional systems in site- and use-specific situations. However, it is important to remember that even in remote areas there are conventional, competitive options available.

This paper seeks to explore basic concepts to stimulate the developers and producers of alternative energy systems to look at their products, or potential products, from a customer's viewpoint. Understanding the customer's needs, and developing and positioning the product to address those needs are critical elements for the successful commercialization of any new product, including alternative energy systems.

R. L. Sampson
24August85

CRRERIS AND ITS AVAILABILITY VIA CSIRO, AUSTRALIS

Dr G Jackson

CSIRO, Melbourne

CRRERIS and its availability via CSIRO AUSTRALIS

CRRERIS

The Commonwealth Regional Renewable Energy Resources Information System (CRRERIS) is a network designed to facilitate the transfer of information on renewable energy between Commonwealth countries in Asia and the Pacific. CRRERIS is an initiative of the Regional Consultative Group on Energy which was formed at the first Commonwealth Heads of Government Regional Meeting.

Nineteen countries are involved in CRRERIS; these are Australia, Bangladesh, Cook Islands, Fiji, India, Kiribati, Malaysia, Maldives, Nauru, Singapore, Solomon Islands, Sri Lanka, Tonga, Tuvalu, Vanuatu and Western Samoa; and the South Pacific Bureau for Economic Co-operation represents the involvement of the Pacific. Liaison Centres have been established in each of these countries and a Network Centre is located at the Commonwealth Scientific and Industrial Research Organization, Melbourne, Australia.

CRRERIS has developed and maintains a computerised bibliographic database providing references to published and unpublished documents originating in Member Countries relating to all aspects of renewable energy resources; together with the operation of a document clearing-house.

Each Liaison Centre is generally responsible for fostering awareness of CRRERIS and encouraging participation in CRRERIS activities. More specifically, a Liaison Centre is responsible for collecting, and where possible, indexing relevant documents. This indexed information is used by the Network Centre to maintain a machine-readable database from which the published index is produced. The Commonwealth Regional Renewable Energy Resources Index (CRRERI) is produced quarterly in both printed and microfiche editions. Documents indexed in CRRERI are available to Liaison Centres upon request.

Other activities include the production of directories to subject experts, research centres and products. A Renewable Energy Experts Directory lists the names and addresses of experts in the region, whilst the Renewable Energy Products Directory lists the manufacturers of appropriate products. Repackaging of information to make it more useful to CRRERIS countries is also undertaken; topics are chosen in consultation with Liaison Centres.

The CRRERIS Network Centre co-ordinates the replies to requests for information from Liaison Centres. Requests on topics such as legislation to control small-scale distillation of alcohol, availability of wind generators, standards for photovoltaic cells and energy-efficient refrigerators have been answered from a variety of sources. These sources include CRRERI, information from Liaison Centres, overseas databases, consultants, published documents and product information.

The number of information enquiries from Liaison Centres is increasing and shows the need for effective information transfer in the region. All CRRERIS activities are regularly reviewed by meetings of the Heads of Liaison Centres, to maintain awareness of individual and system needs and facilities. This continuing discussion within CRRERIS has maintained the close co-operation that has ensured the success of CRRERIS as a regional information system.

AUSTRALIS

CSIRO intends to make the databases it produces publicly available via AUSTRALIS [**AU**stralian **S**cience **T**echnology **R**esearch **A**nd **L**ibrary **I**nformation **S**ystem] in January 1986 and the CRRERIS database will be included in the system.

The availability of CRRERIS on AUSTRALIS will allow Australian and international researchers in renewable energy fields to gain direct online access to the information contained in the CRRERIS database and to produce subject bibliographies on request.

For further information on CRRERIS activities in Australia or AUSTRALIS development in general contact:

Dr Grahame Jackson
CSIRO Central Information Service
314 Albert Street
East Melbourne Vic. 3002
Telephone: (03) 4187274